Box Cove (Plaster Trim)

WG-BC-RPT

Cove

Recessed Plaster Trim

Installation Instructions

Luminaires must be installed by a qualified electrician. Check with local and national codes for proper installation.

To prevent electrical shock disconnect electrical supply before installation or servicing.

Never connect a Fixture to a live Driver!!!

Contractor is responsible for adequately reinforcing walls and/or ceilings to support fixture weight. Provide blocking when necessary.

Step 1 - ***Open the Box***

a Unpack Luminaire unit(s). The Luminaire consists of (2) major parts: A Housing and a Gear Tray. Integral drivers are supplied by Inter-lux.

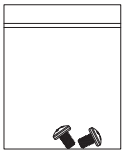

Gear Tray
Mounting Screws
(number of screws supplied depends on length of fixture)

Satin Clear Wipedown Cover Lens
(Optional)

Gear Tray

Housing



Wall Mounting Clip
(1 per foot)

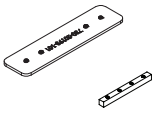

Joiner Kit
(1) Wide Joiner with Set Screws
(1) Narrow Joiner with Set Screws

Optional** End Caps are supplied assembled in Kits on **Stand Alone Units** and on **Multi Unit Runs



2mm Hex Key

1.5mm Hex Key

Need Help?

Step 2 - ***Surface Prep***

a Mark level line on wall for Stand Alone unit or for the entire Run. Mount one clip per foot with blocking. Mounting screws/anchors *by others*.

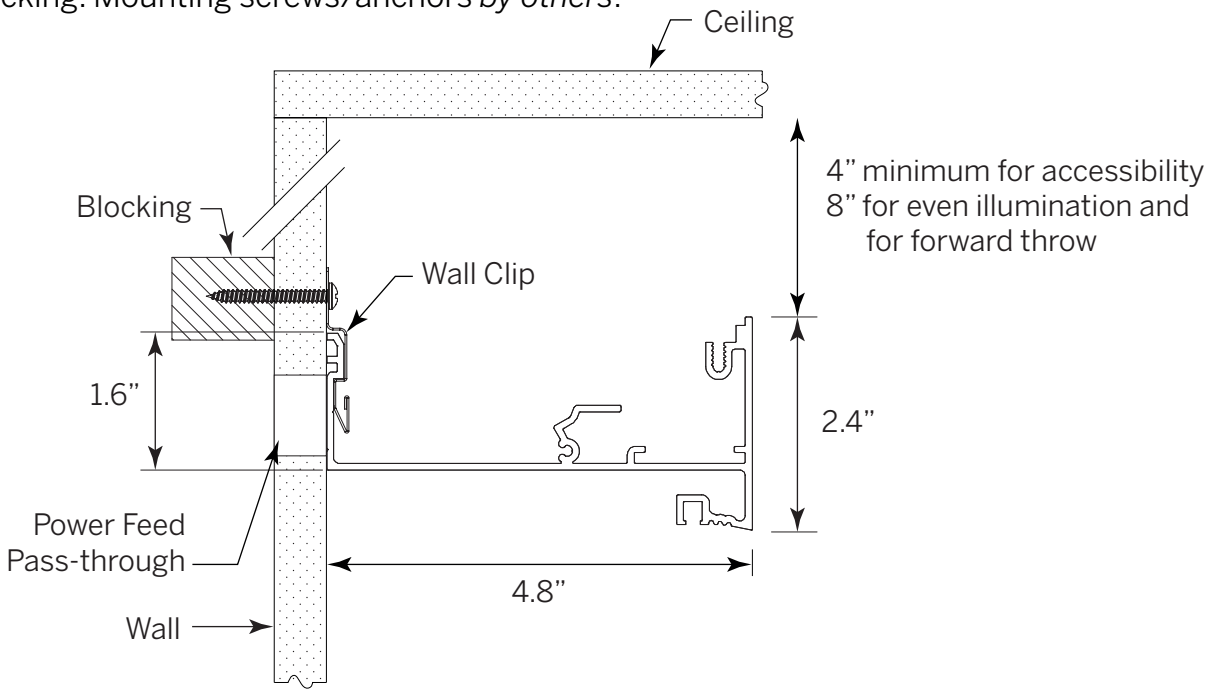

Step 3 - ***Housing Prep***

a On back surface of Housing, drill a 7/8" hole as a Power Feed pass-through. In Multi Unit Runs, this is necessary only on units that receive an incoming power feed.

Cable clamp for incoming conduit supplied by others.

NOTE: Location of Power Feed and mounting holes shown at right illustration only. Refer to Record Drawing to determine location based on specific installation.

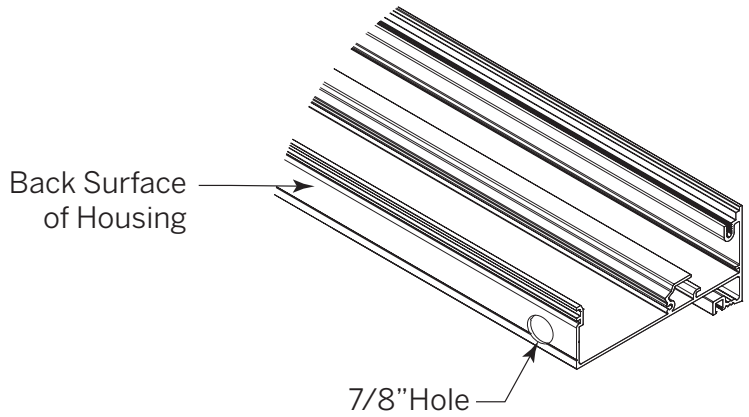

b Corresponding to Power Feed Hole, drill Hole in Wall for incoming power feed sized for cable clamp (by others).

Need Help?

Stand Alone Unit: Skip to **Step 5**

Step 4 - ***Install Joiners*** - *Multi Unit Run only*

a On Starting Unit, at opposite end from where Power Feed Hole was drilled, slide Wide Joiner *completely* into Wide Joiner Channel.

b Do not tighten Set Screws at this time.

c Similarly, slide Narrow Joiner *completely* into Square Joiner Channel at bottom of Housing.

d Do not tighten Set Screws at this time.

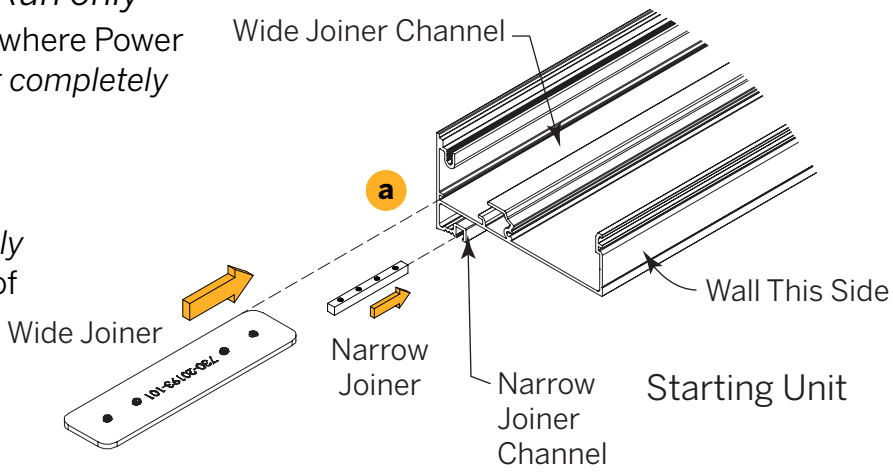

Step 5 - ***Install Housing***

a Slide Housing upward such that Back Rail slides up and underneath Mounting Clip.

b Pull Incoming AC Power Feed through Wall and into Housing (if applicable).

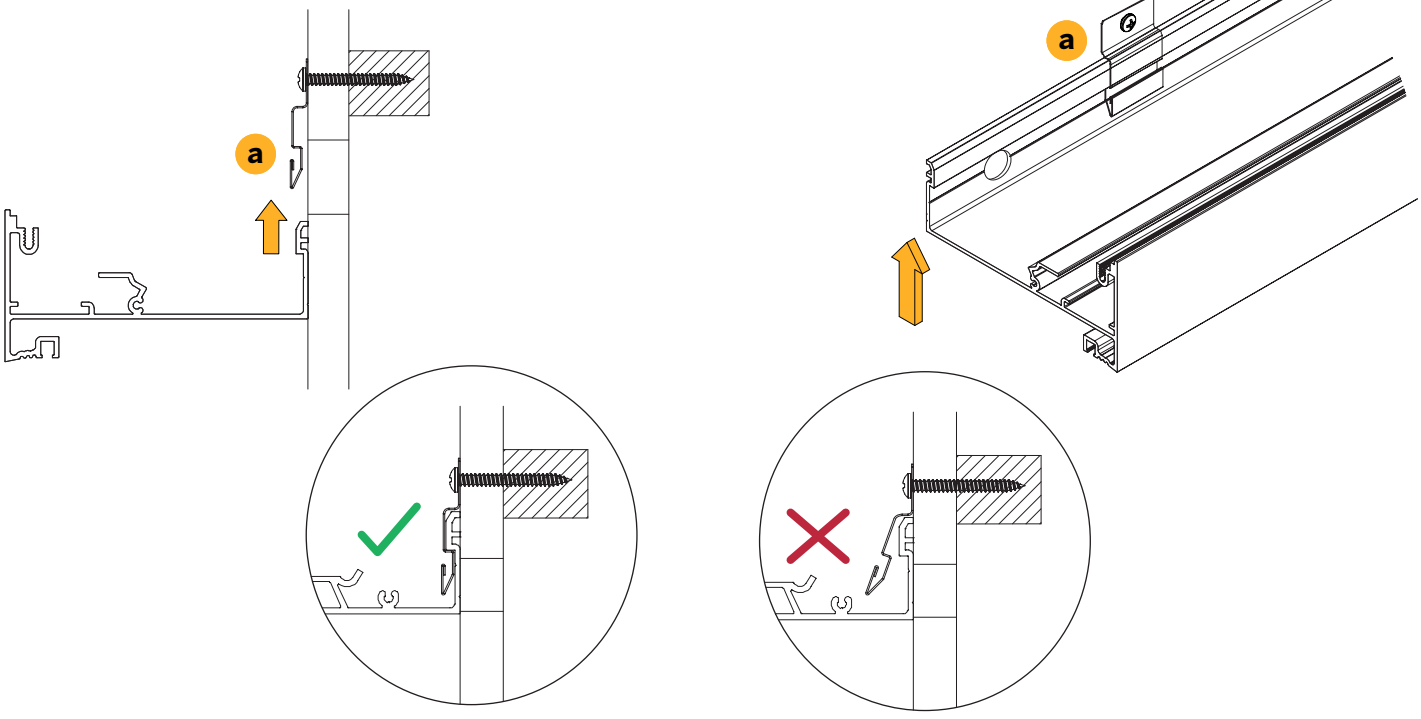

Take care not to bend Wall Clip during installation!

Need Help?

Step 5 - ***Install Housing*** *(continued)*

c *Stand Alone Unit*: Skip to **Step 8**
Multi Unit Run: Repeat sub-step **a** for each additional unit, then slide next unit onto exposed Joiners of installed unit. Long runs may have additional power feeds. Tighten Set Screws to fasten.

d Slide Joiners across joint to bridge both units equally. Tighten Wide Joiner with supplied 2mm Hex Key. Tight Narrow Joiner with supplied 1.5mm Hex Key.

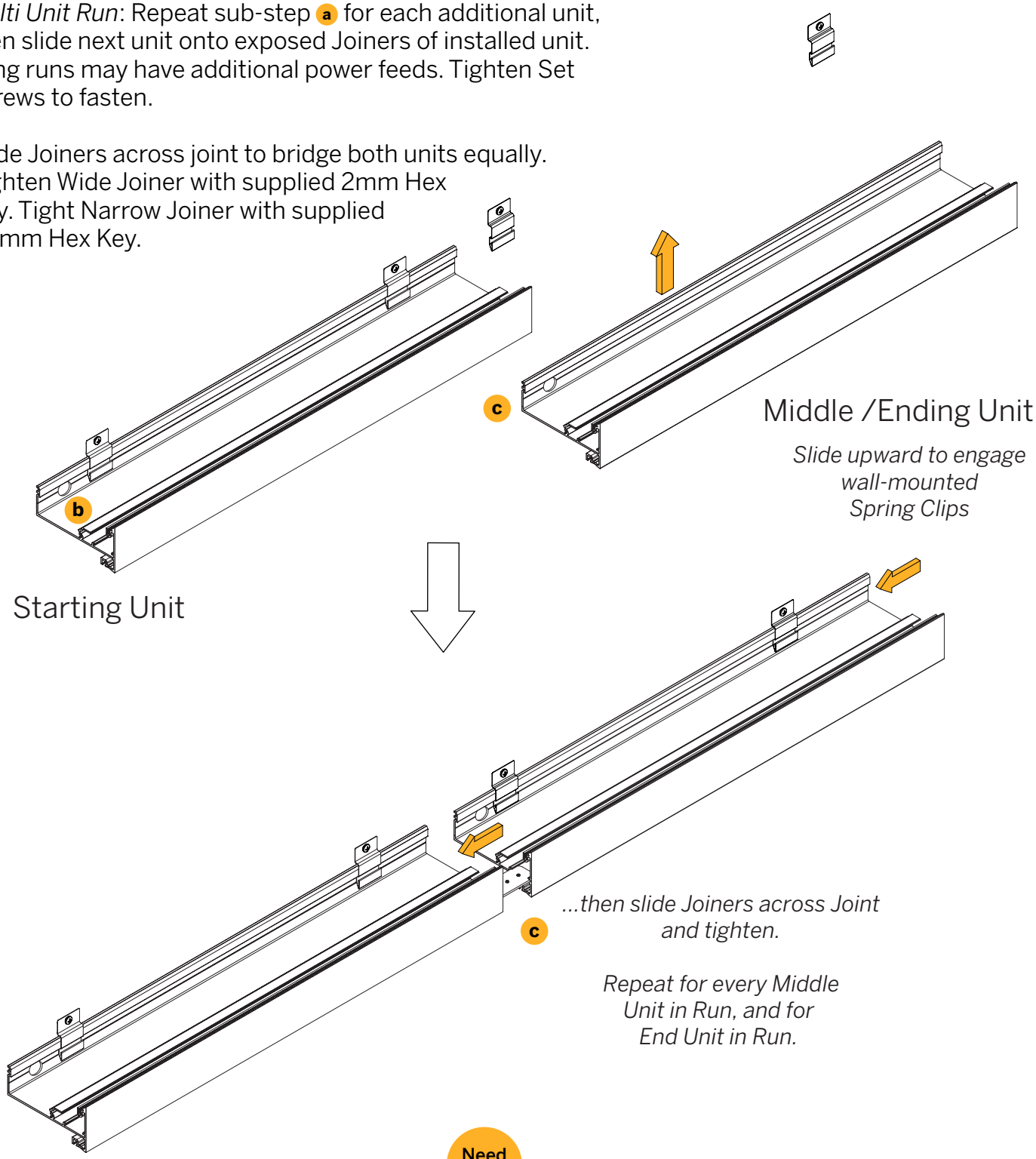

Need Help?

Step 5 - ***Install Housing*** *(continued)*

When installing a Pattern, start with a Corner. The Pattern Coffer and Raft (PC & PR) corners are welded at the factory. Follow ***Step 5*** to mount to existing Run. Arrows indicate light direction.

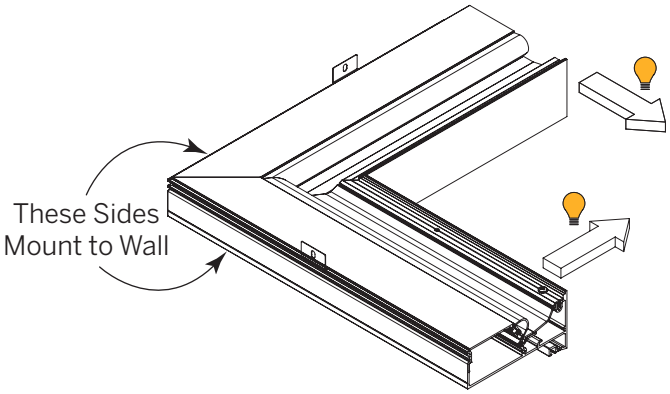

Pattern Coffer *(PC)*
Inside Corner

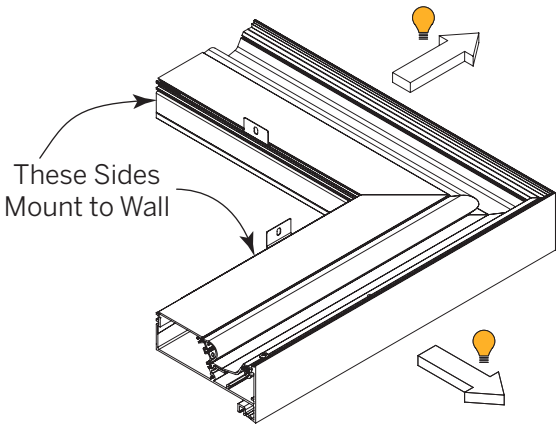

Pattern Raft *(PR)*
Outside Corner

Step 6 - ***Add Drywall Surface***

a Insert 4" wide piece of Drywall behind front lip as shown below.

b Fasten to housing with appropriate screws (by others).

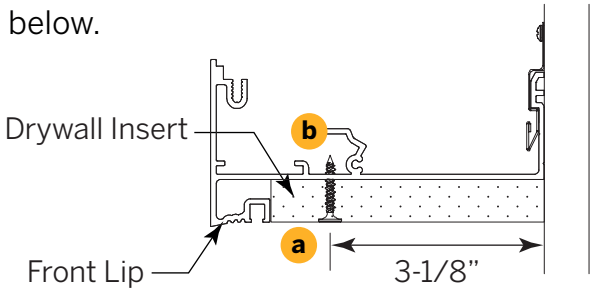

Step 7 - ***Apply Joint Compound***

Apply Joint Compound under nose of profile covering all channels and screws, feathering all edges.

NOTE: Fixture is field paintable. However, plastering and painting must be complete *before* reinstallation of Gear Tray.

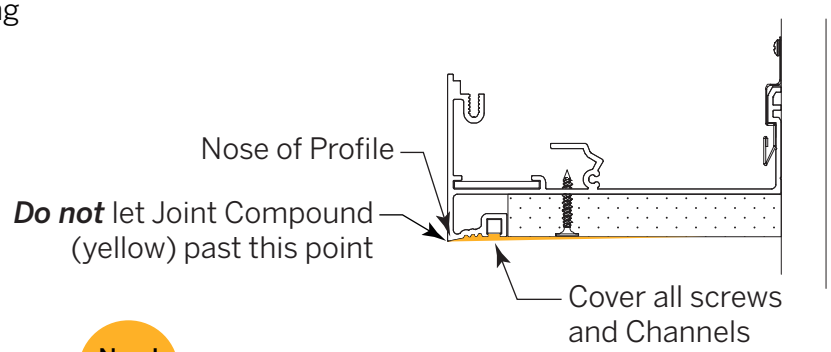

Need Help?

Step 8 - ***Install Optional End Caps***

a On either end of *Stand Alone Unit*, or *Starting Unit* and *Ending Unit* of a *Multi Unit Run,* slide the tab of End Cap into major channel on inside bottom of housing.

b Fasten End Cap to Housing via (2) Set Screws using the supplied 2mm Hex Key.

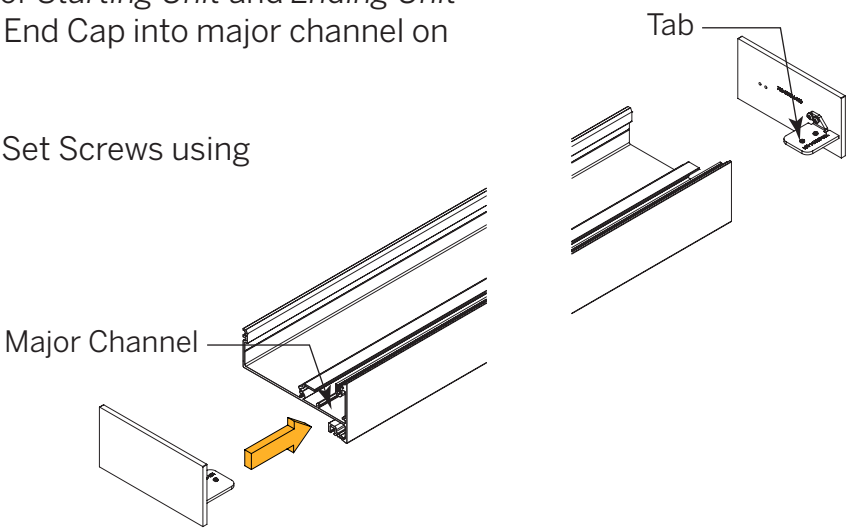

Step 9 - ***Reinstall Gear Tray***

Select relevant Wiring Diagram found at the end of this document. For more detailed information, see the Driver Information pages for this product on our website.

a Connect Incoming Power Feed to Driver.

b Tuck Power Feed Cable into Housing, Lower Gear Tray to Cover.

c Fasten Gear Tray to Housing with supplied Mounting Screws into the Threaded Screw Channel.

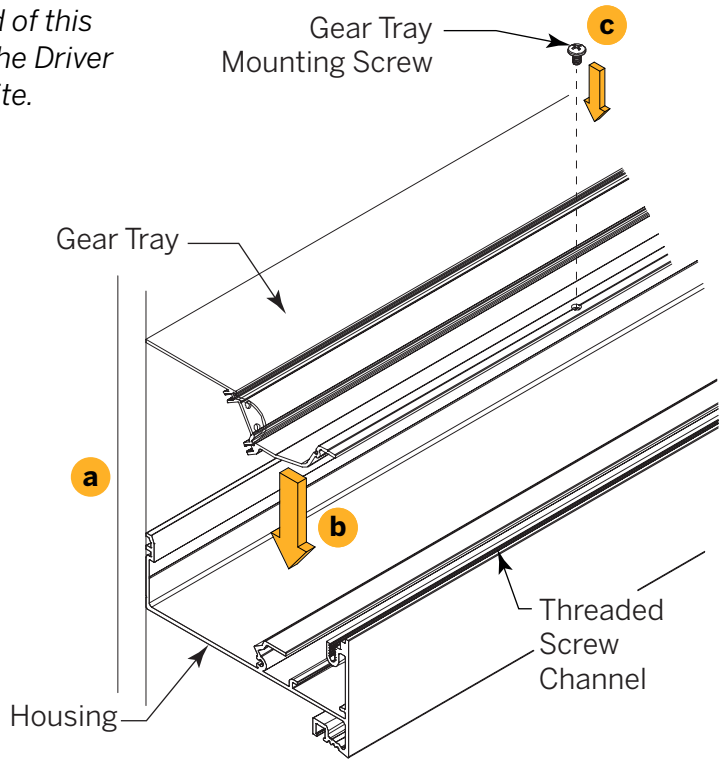

Need Help?

Step 9 - ***Reinstall Gear Tray*** *(continued)*

d For ***optional*** *Satin Clear Wipedown Cover Lens*: Lay Cover Lens on top of Gear Tray. Front Edge of Lens to rest on Front Lip of Gear Tray.

e Cover Lens is predrilled with holes corresponding to those on Gear Tray. Fasten Cover Lens using same screws used for Gear Tray.

f Energize!

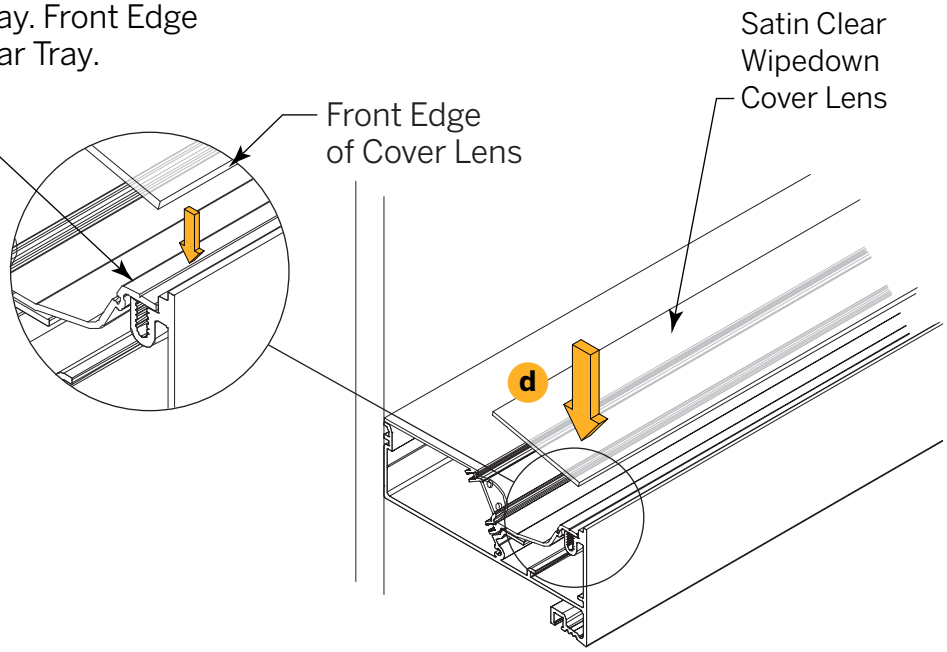

Wiring Diagrams

E1 = eldoLED 0.1% dimming, 0-10V, *(Static White only)* p. 8
L1 = Lutron 1% dimming, Ecosystem, *(Static White only)* p. 8
D2DT6 = eldoLED DALI-2 (DT6), 0.1% dimming, *(Static or Tunable White)* p. 9
D2DT8 = eldoLED DALI-2 (DT8), 0.1% dimming, *(Tunable White only)* p. 10
D010 = eldoLED, 10% 0-10V dimming, *(Warm Dim only)* p. 10
DPH = Phase Dimming, 1% dimming, *(Remote Driver/Warm Dim only)* p. 11
L3DAE = Lutron Hi-lume 1% EcoSystem, *(Warm Dim only)* p. 11
L3D0E = Lutron Hi-lume Premier 0.1% EcoSystem, *(Warm Dim only)* p. 12
EL96 = eldoLED 0-10V, 0.1% dimming, *(Warm Dim only)* p. 12
DALI = eldoLED DALI-1 (DT6), 0.1% dimming, *(Warm Dim only)* p. 13
DMX = eldoLED 24V, 0.1% DMX dimming, *(Integral Driver/Warm Dim + RGBW only)* p. 14

All Drivers may be Integral or Remote unless otherwise noted.

Need Help?

Wiring Diagrams

E1 = eldoLED 0.1% dimming, 0-10V (120-277V)

Static White only!

30W



75W



L1 = Lutron 1% dimming, Ecosystem (120-277V)

Static White only!

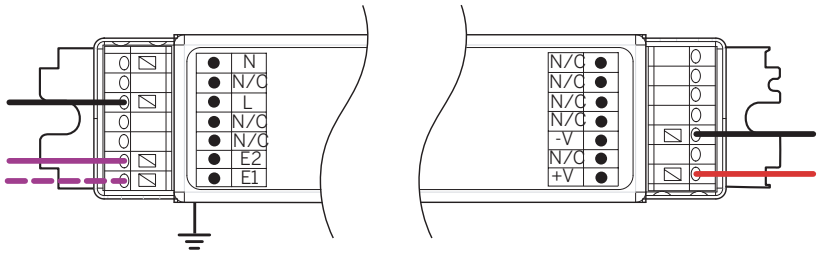

Ground*

Need Help?

Wiring Diagrams

D2DT6 = eldoLED DALI-2 (DT6), 0.1% dimming (120-277V)

Static White only!

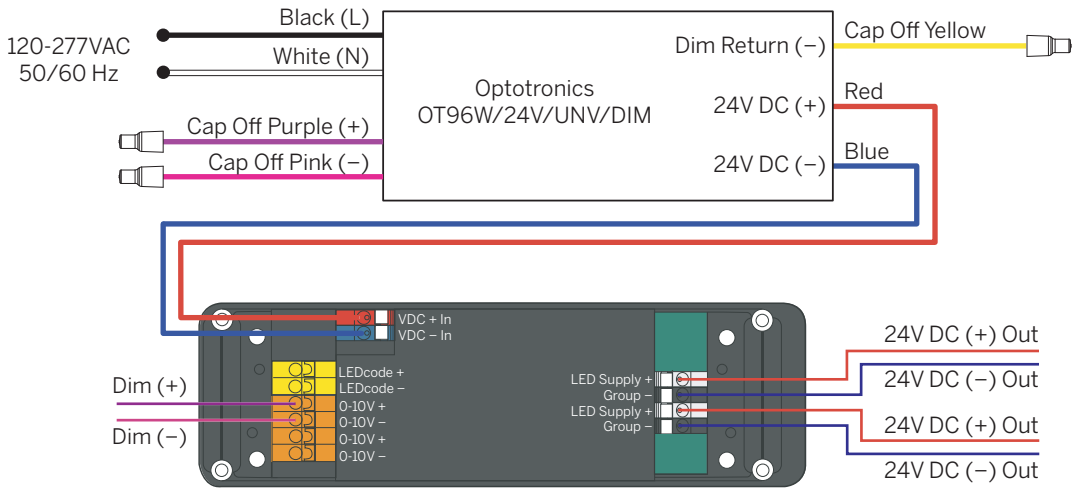

Tunable White only!

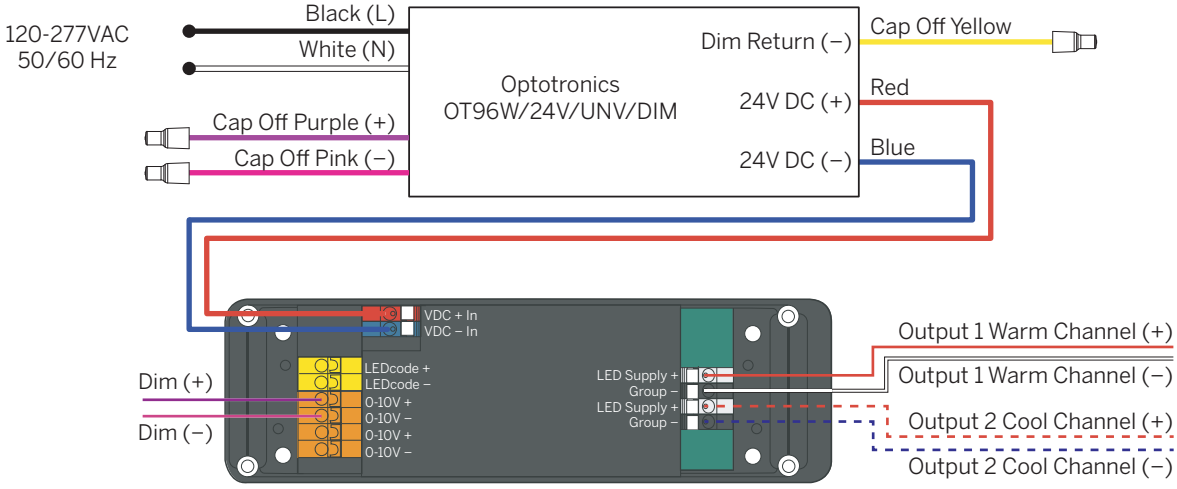

Need Help?

Wiring Diagrams

10/14

D2DT8 = eldoLED DALI-2 (DT8), 0.1% dimming (120-277V)

Tunable White only!

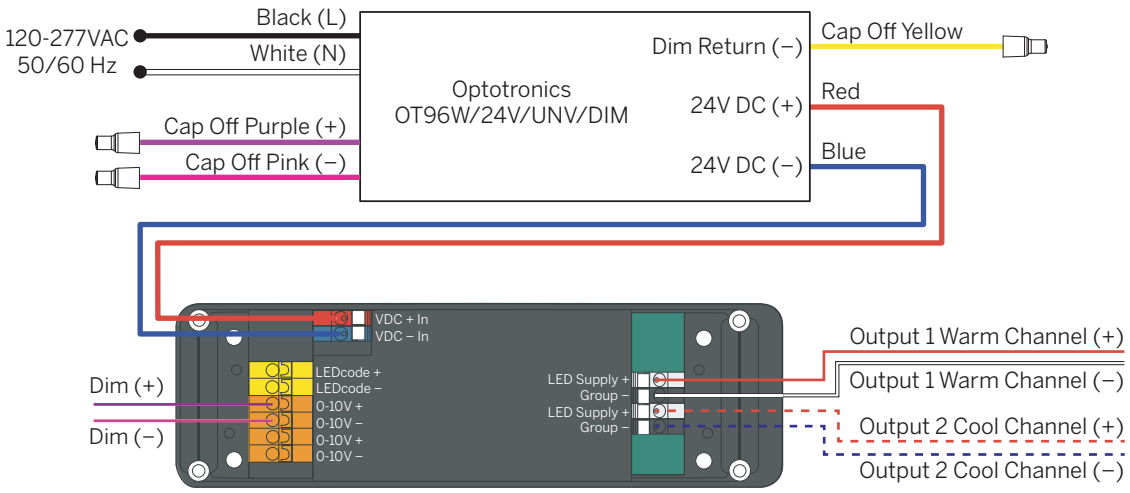

D010 = eldoLED, Non-Dim or 10% 0-10V dimming (120-277V)

Warm Dim only!

Dimming

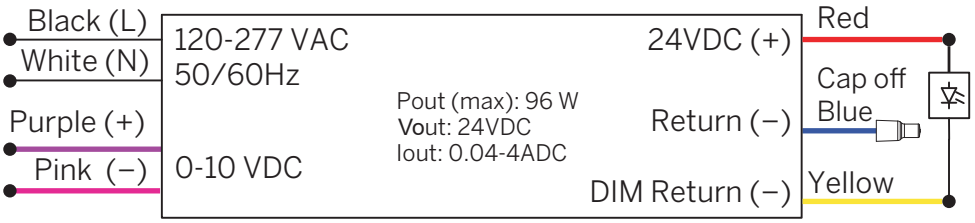

WARNING: If not connected to a 0-10V dimmer, driver MUST be wired as Non-dim. Not doing so can cause the driver and the fixtures to fail prematurely.

Need Help?

Wiring Diagrams

DPH = Phase Dimming, 1% dimming (120V only)

Remote Driver/Warm Dim only!

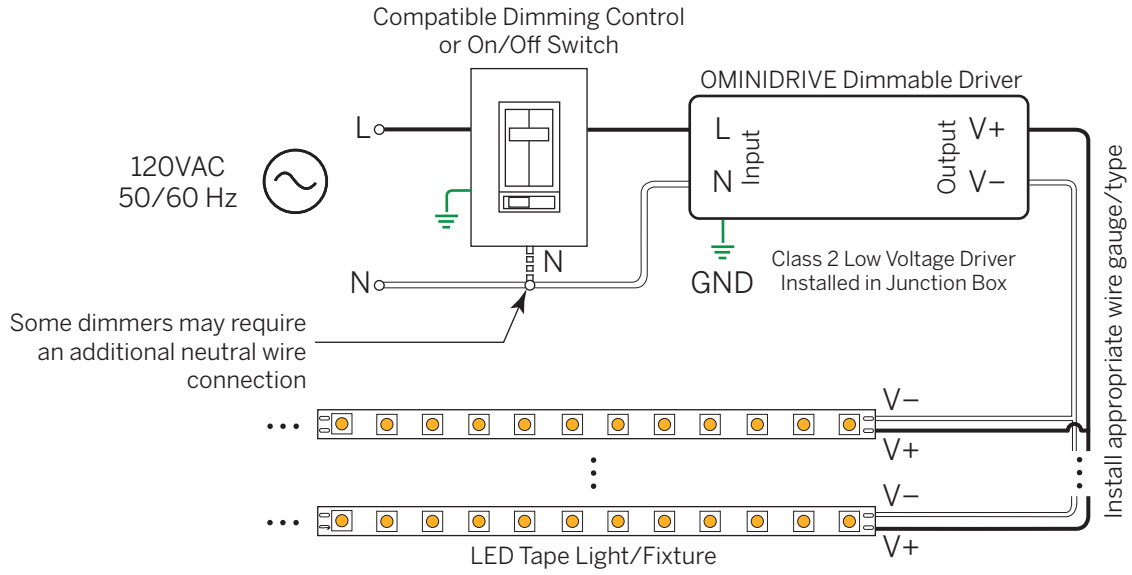

L3DAE = Lutron Hi-lume 1% EcoSystem (120-277V)

Warm Dim only!

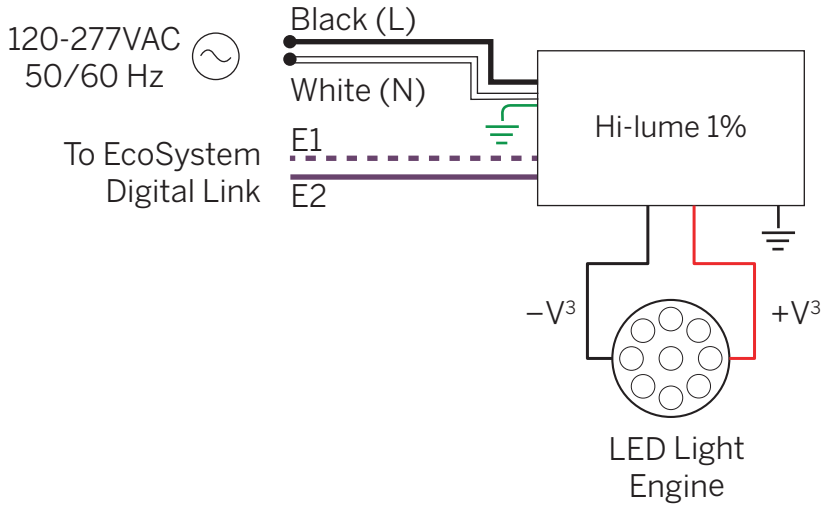

Need Help?

Wiring Diagrams

L3D0E = Lutron Hi-lume Premier 0.1% EcoSystem (120-277V)

Remote Driver/Warm Dim only!

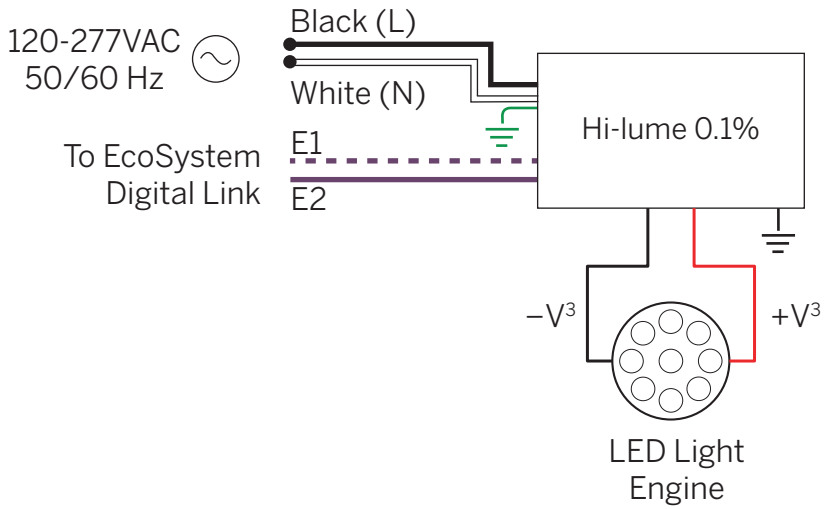

EL96 = eldoLED 0-10V, 0.1% dimming (120-277V)

Warm Dim only!

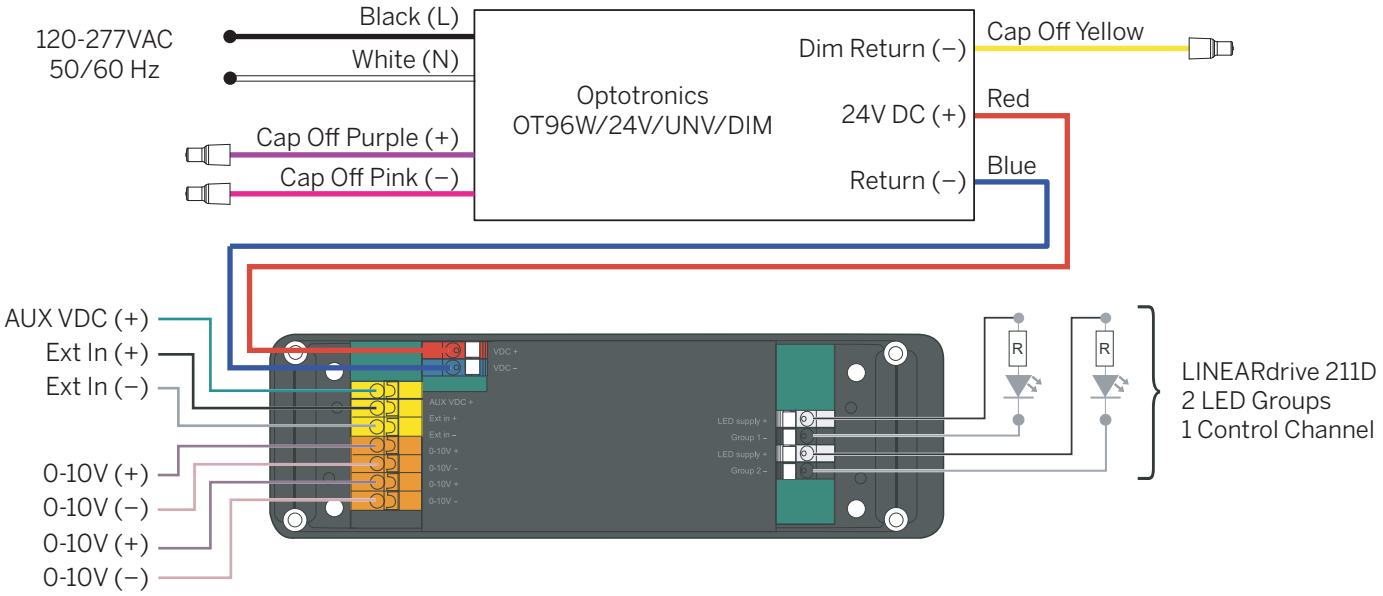

Need Help?

Wiring Diagrams

DALI = eldoLED DALI-1 (DT6), 0.1% dimming (120-277V)

Warm Dim only!

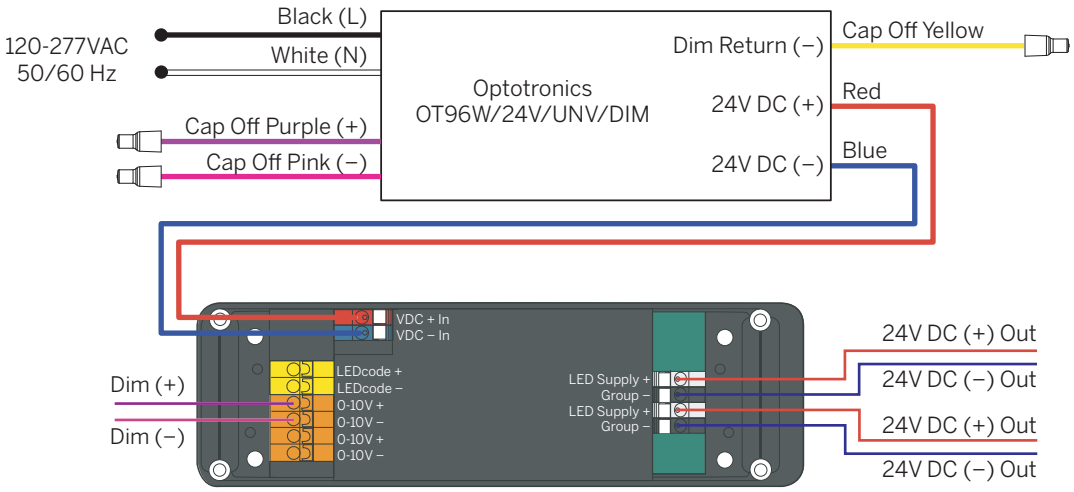

This Space Intentionally Left Blank

Wiring Diagrams

DMX = eldoLED 24V, 0.1% DMX dimming

Warm Dim + RGBW only!

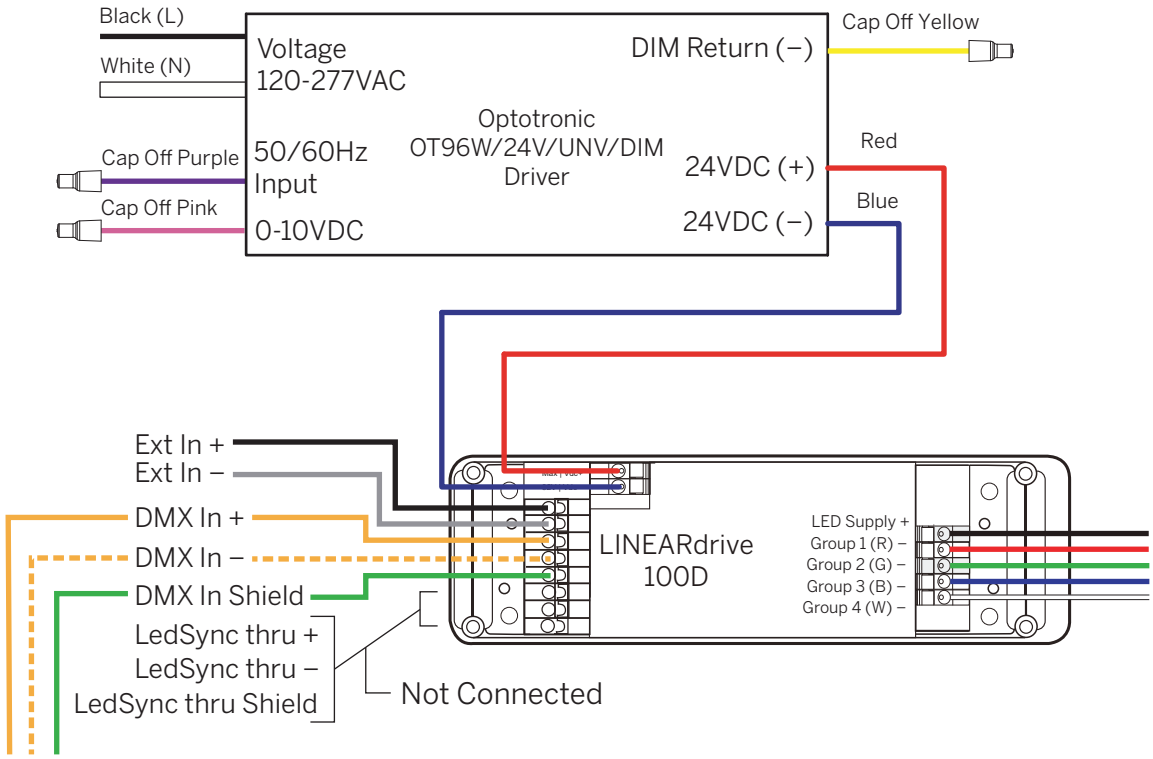

NOTE: A second OT96W & LINEARdrive 100D pair may be daisy-chained to the first set of DMX connectors (DMX In +, DMX In –, DMX In Shield). A third pair may be daisy-chained to the second, etc.

Need Help?