ProTools 60 Linear Wall Graze

inter•lux

PLASTER TRIM

INSIDE CORNER (PI)

WG-60PTLWG-RPT-PI-RLW/RLB

TOP VIEW

SECTION

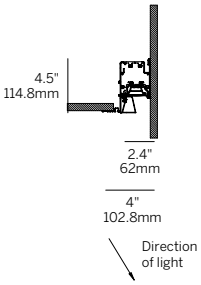

OUTSIDE CORNER (PO)

WG-60PTLWG-RPT-PO-RLW/RLB

SECTION

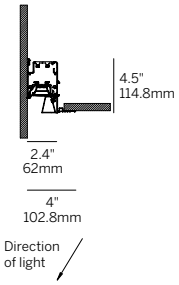

TOP VIEW

BOTTOM VIEW

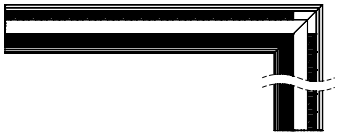

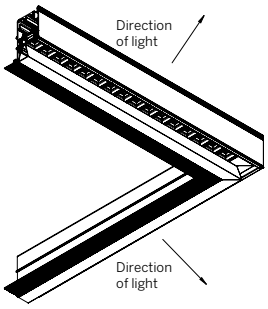

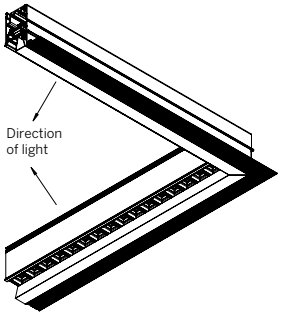

BOTTOM VIEW

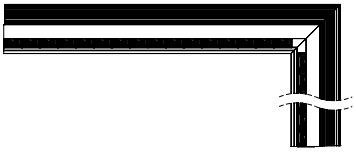

Minimum Angle 45º
Maximum Angle 180º

INSIDE CORNER (PI)

WG-60PTLWG-RPT-PI-REO

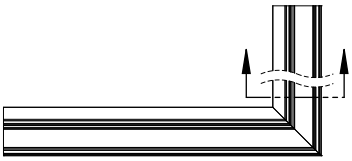

TOP VIEW

SECTION

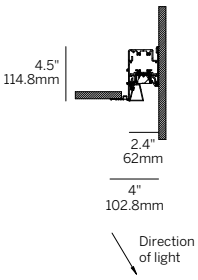

OUTSIDE CORNER (PO)

WG-60PTLWG-RPT-PO-REO

SECTION

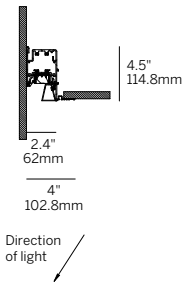

TOP VIEW

BOTTOM VIEW

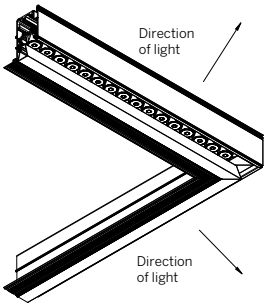

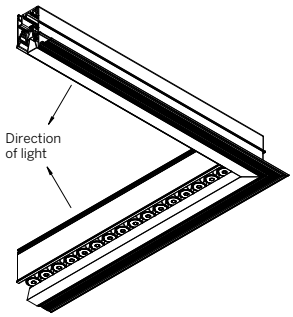

BOTTOM VIEW

Minimum Angle 45º
Maximum Angle 180º

ProTools 60 Linear Wall Graze

inter•lux

BEZEL / GRID TRIM

INSIDE CORNER (PI)

WG-60PTLWG-[RBT / RGT9 / RGT15]-PI-RLB/RLW

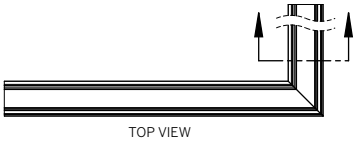

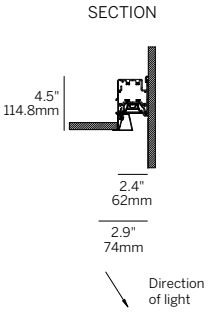

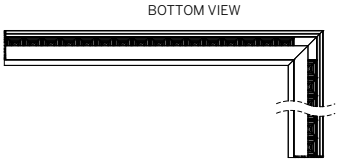

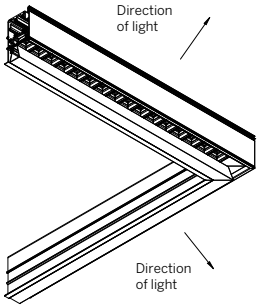

Minimum Angle 45º
Maximum Angle 180º

OUTSIDE CORNER (PO)

WG-60PTLWG-[RBT / RGT9 / RGT15]-PO-RLB/RLW

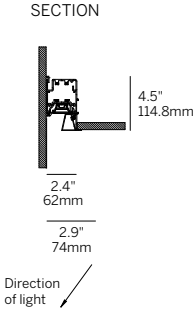

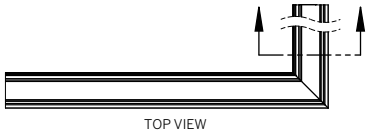

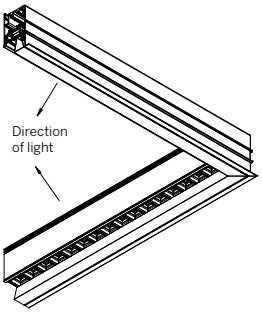

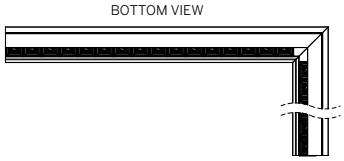

INSIDE CORNER (PI)

WG-60PTLWG-[RBT / RGT9 / RGT15]-PI-REO

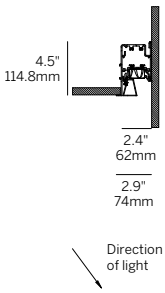

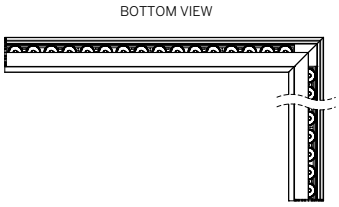

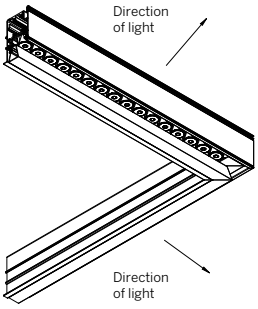

Minimum Angle 45º
Maximum Angle 180º

OUTSIDE CORNER (PO)

WG-60PTLWG-[RBT / RGT9 / RGT15]-PO-REO

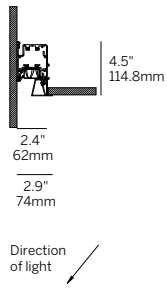

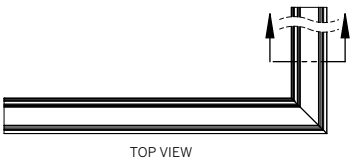

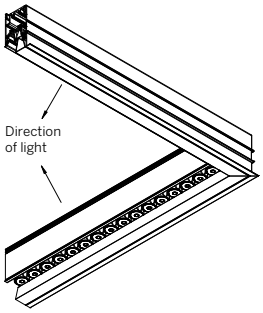

CORNER + STRAIGHT RUN CONNECTIONS

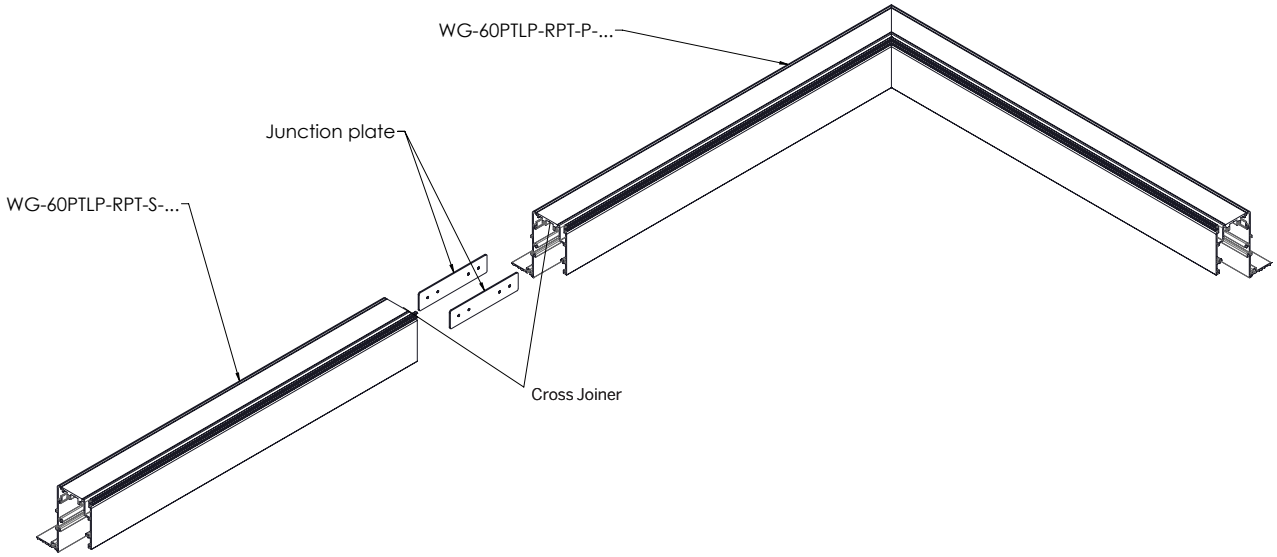

CROSS JOINER

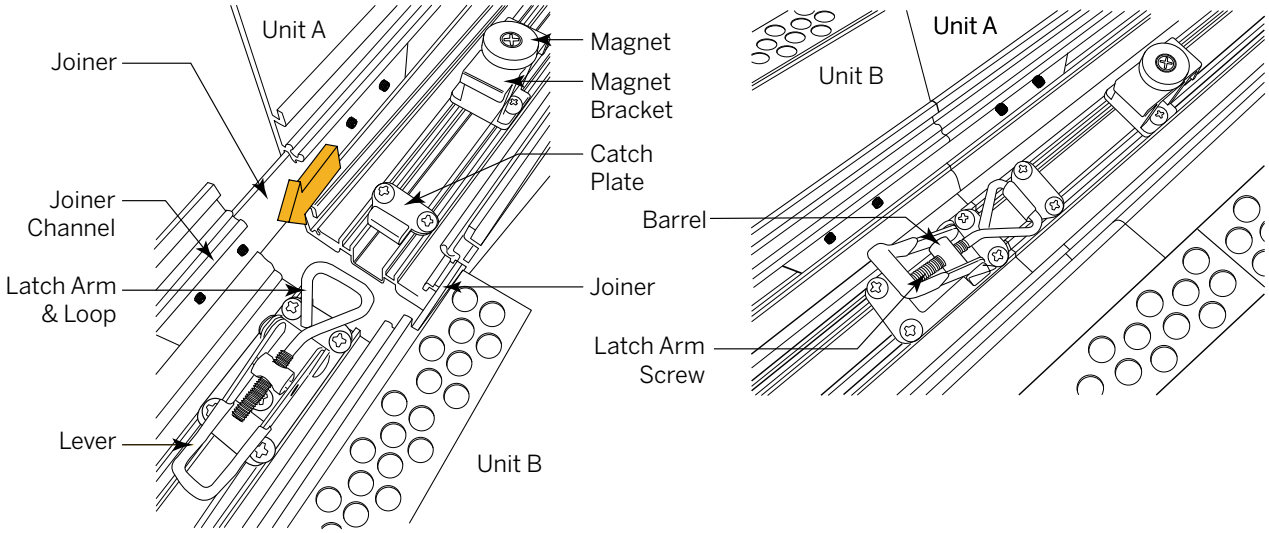

The Boot Latch Cross Joiner securely connects linear lighting at cross intersections, ensuring precise alignment, stability, and a clean, continuous appearance.

ProTools 60 Linear Wall Graze

inter•lux

CHICAGO PLENUM

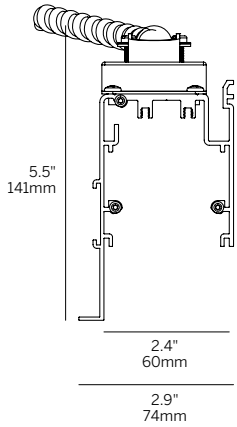

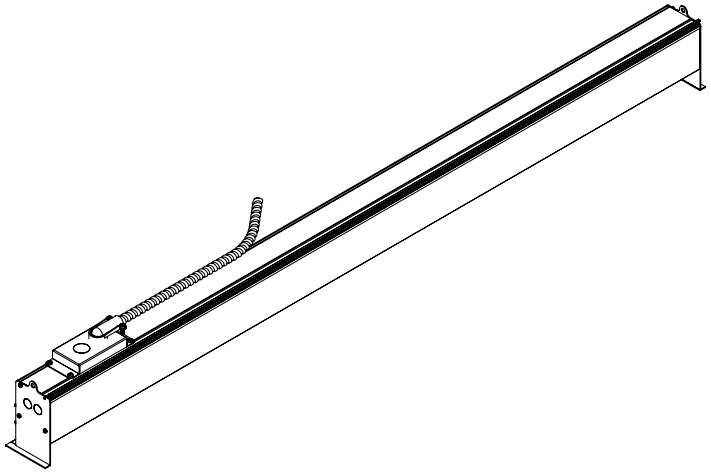

ProTools 60 Linear Wall Graze

inter•lux

PROFILE DIMENSIONS

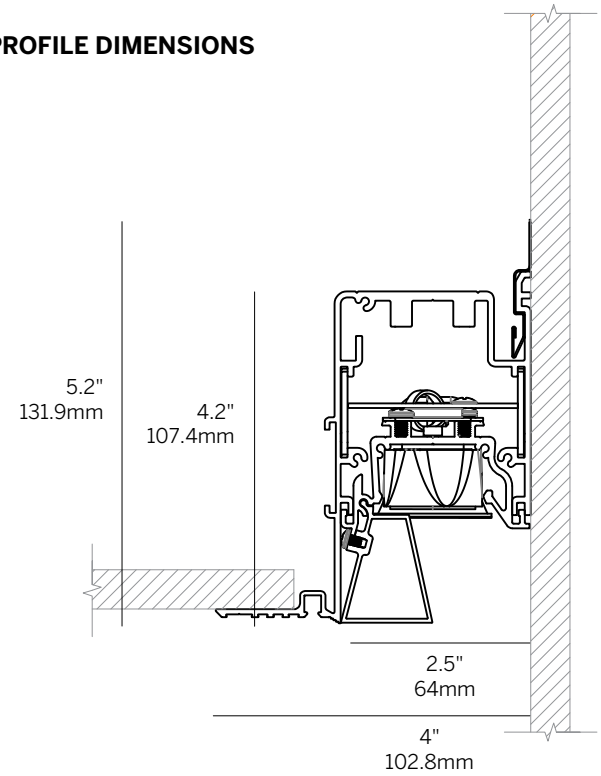

Recessed Plaster Trim
(RPT)

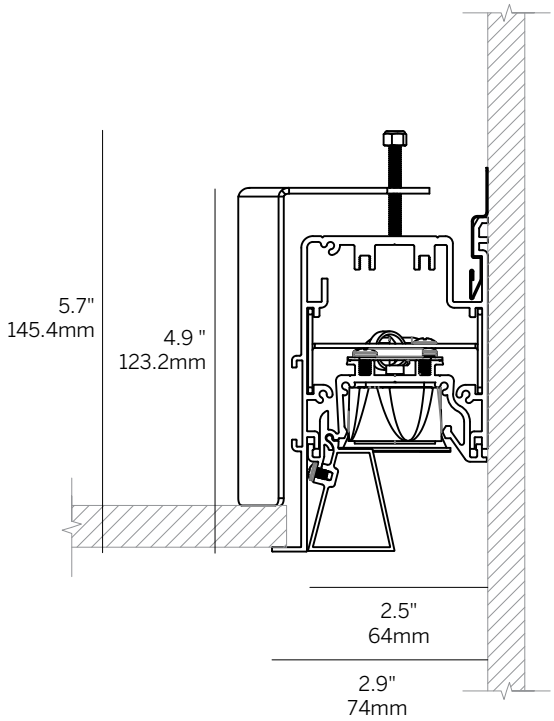

Recessed Bezel Trim
(RBT)

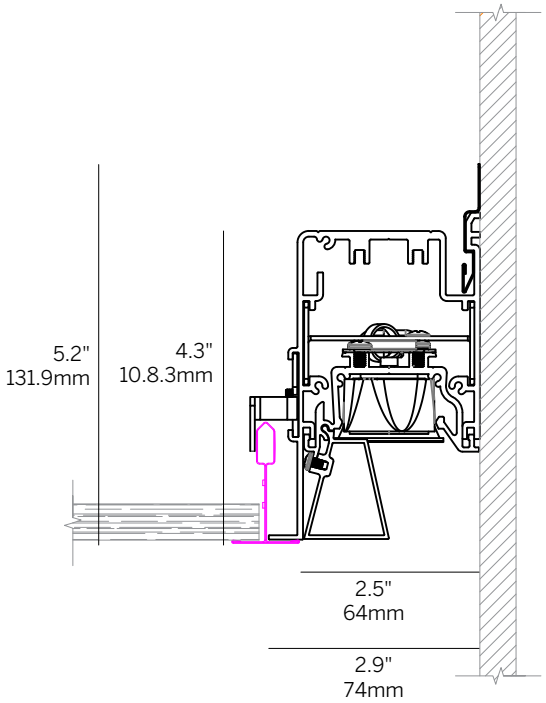

Recessed Grid Trim
9/16 (RGT9) / 15/16 (RGT15)

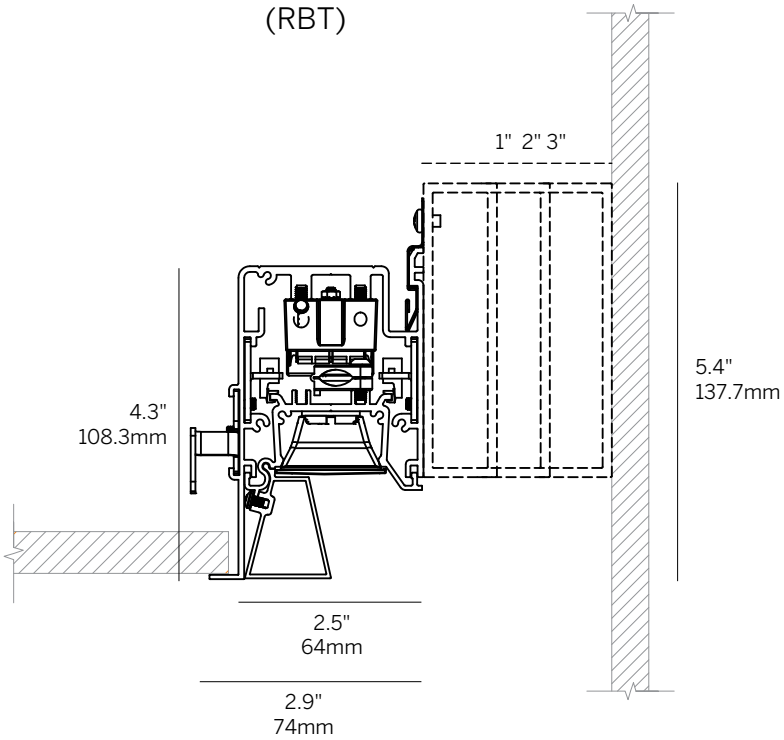

Soft Graze: 1" 2" 3"
(SG1, SG2, SG3)

LENS / LOUVER DIMENSIONS

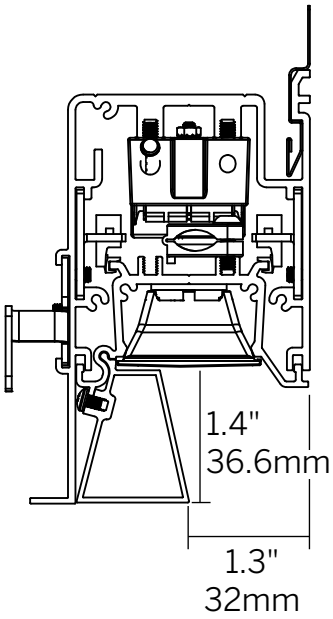

Recessed Louver
(RLW, RLB + WG)

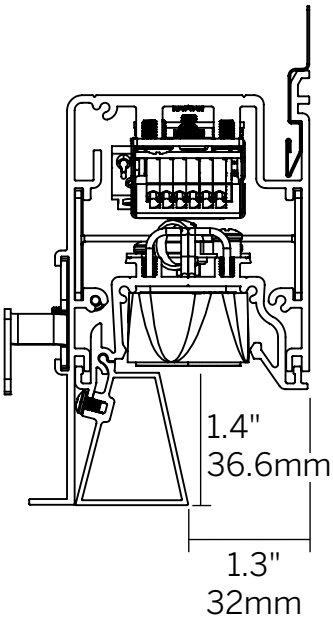

Recessed Elliptical Optic
(REO + WG)

FILLER PLATE STRAIGHT RUN / LOUVER

- RLW, RLB, RNO and REO Optics are available in 6" increments. If the required fixture length should exceed that increment, the over length will be taken up by a Filler Plate in equal lengths on both ends of the fixture run.
- The Filler Plate is recessed and finished to match the louver and minimize visual impact.

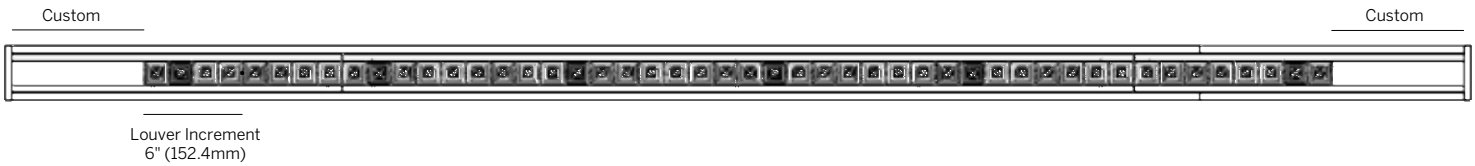

FILLER PLATE CORNER CONFIGURATION / LOUVER

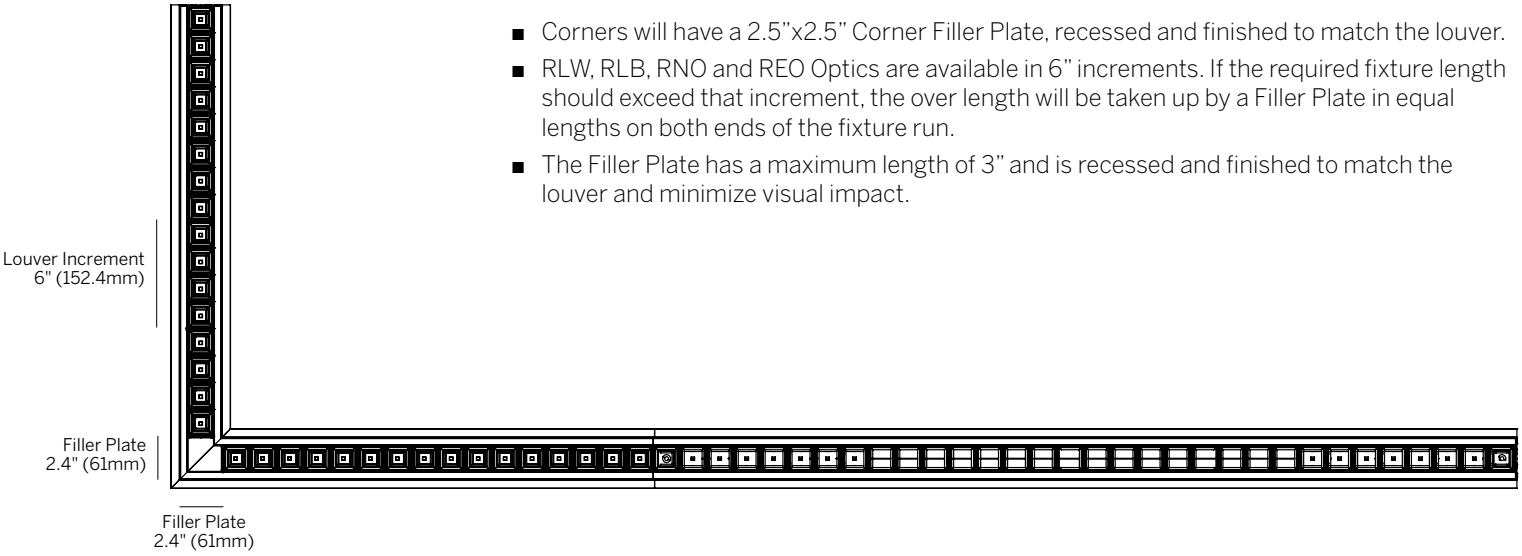

- Corners will have a 2.5"x2.5" Corner Filler Plate, recessed and finished to match the louver.
- RLW, RLB, RNO and REO Optics are available in 6" increments. If the required fixture length should exceed that increment, the over length will be taken up by a Filler Plate in equal lengths on both ends of the fixture run.
- The Filler Plate has a maximum length of 3" and is recessed and finished to match the louver and minimize visual impact.

FILLER PLATE MULTI-CORNER / LOUVER

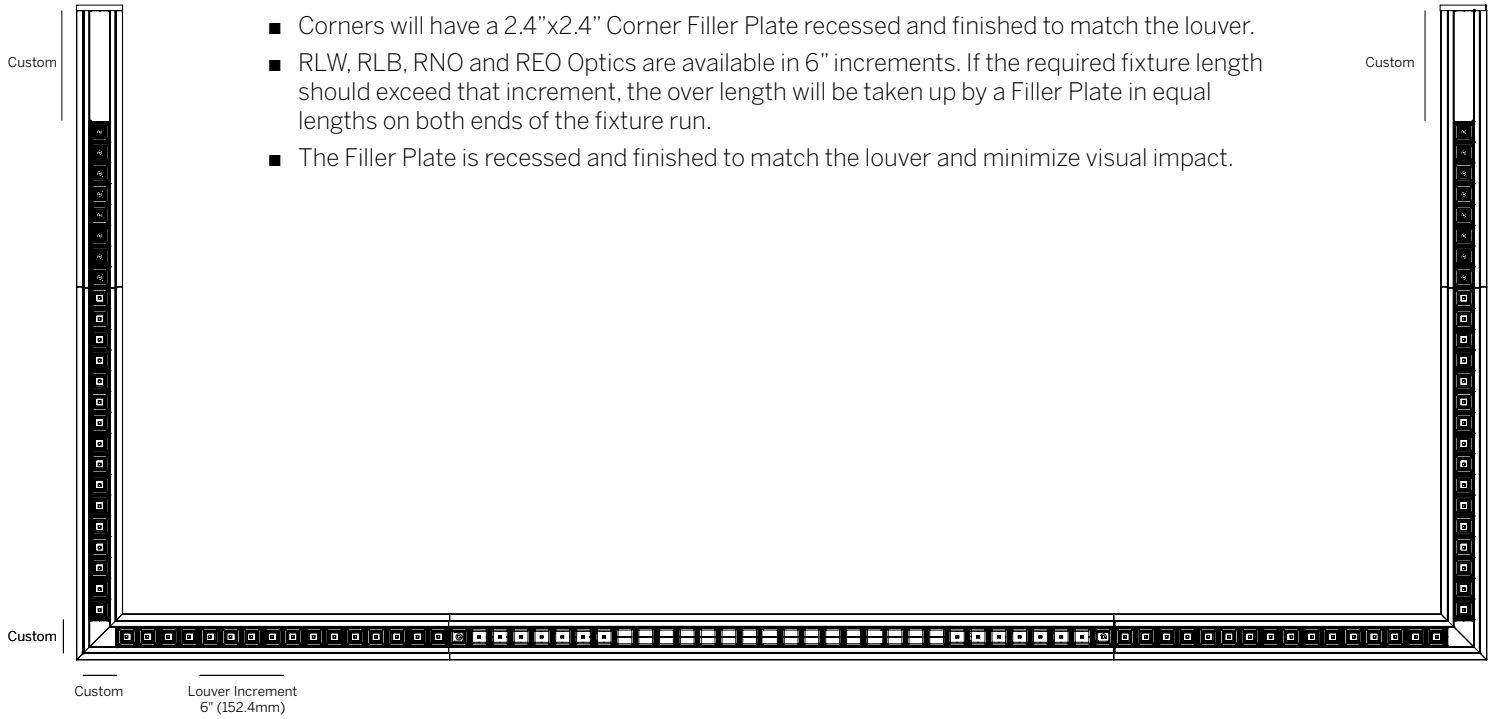

- Corners will have a 2.4"x2.4" Corner Filler Plate recessed and finished to match the louver.
- RLW, RLB, RNO and REO Optics are available in 6" increments. If the required fixture length should exceed that increment, the over length will be taken up by a Filler Plate in equal lengths on both ends of the fixture run.
- The Filler Plate is recessed and finished to match the louver and minimize visual impact.

ProTools 60 Linear Wall Graze

inter•lux

FILLER PLATE WITH WALL WALL GRAZE KICKER

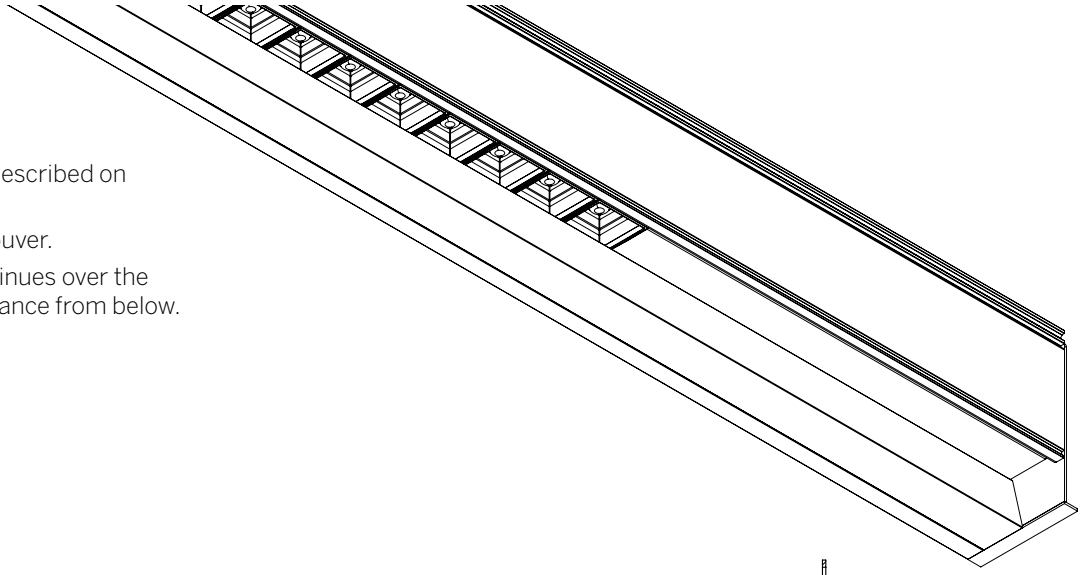

- Filler Plate is provided in conditions as described on preceding pages.
- Filler Plate is flush with RLW and RLB Louver.
- Wall Graze room side kick reflector continues over the Filler Plate to provide consistent appearance from below.

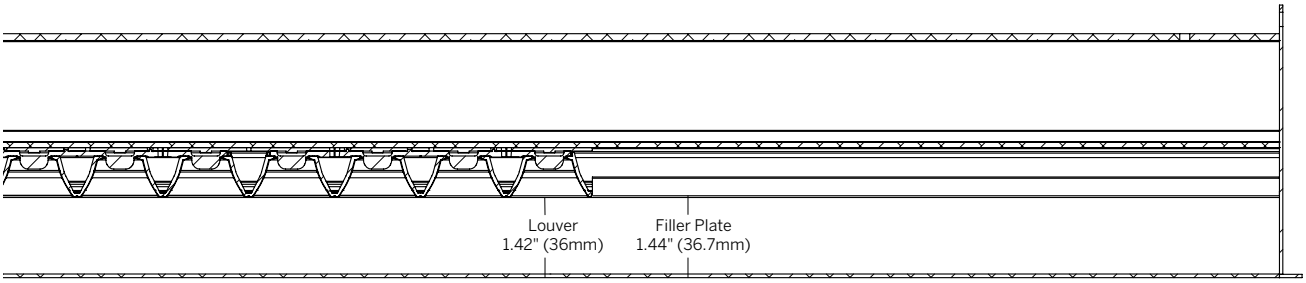

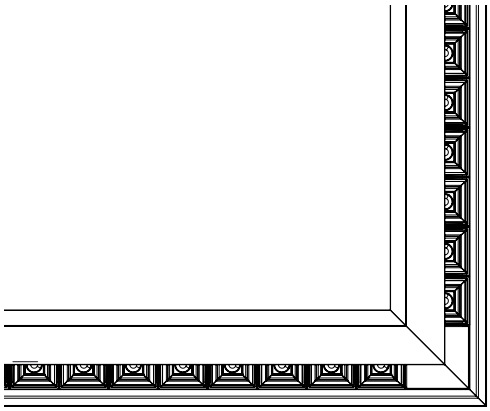

Corner Condition: Plan View

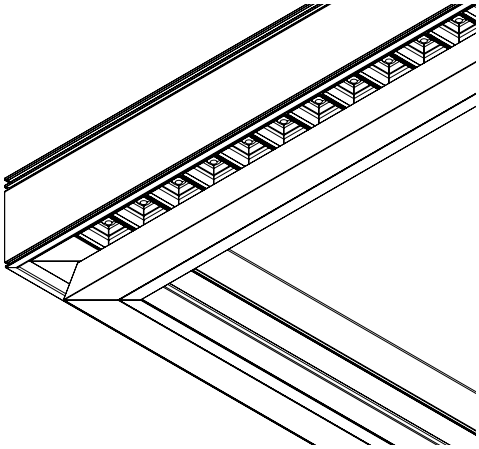

Corner Condition: Isometric