3” ProTools+
WG-80SPTWW-RBT

Installation Instructions

Wall Wash
Square Recessed
Bezel Trim

Luminaires must be installed by a qualified electrician. Check with local and national codes for proper installation.

To prevent electrical shock disconnect electrical supply before installation or servicing.
Never connect a fixture to a live driver!!!

Contractor is responsible for adequately reinforcing walls and/or ceilings to support fixture weight. Provide blocking when necessary.

Step 1 - *Open the Box*

Unpack Luminaire unit. Unit ships with Trim, Springs, and Accessories (e.g. Lenses, Louvers, etc.) attached as specified. Remote Drivers and Housings are supplied by Inter-lux.

*Fixtures must be wired in **series**!*

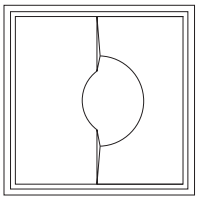

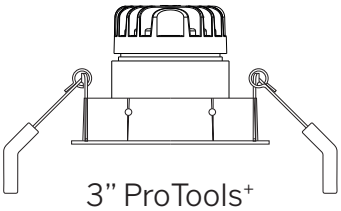

3” ProTools+
6W/9W

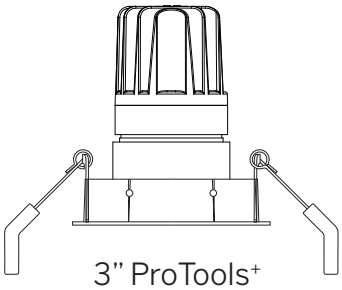

3” ProTools+
12W

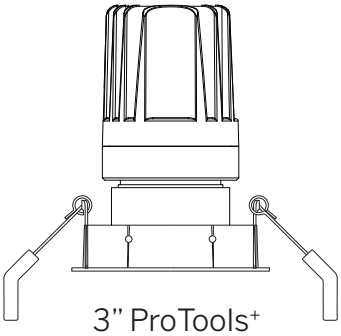

3” ProTools+
16W/20W

Step 2 - *Prep Ceiling*

a Cut 3¼” x 3¼” (80mm x 80mm) square hole

***Ceiling Thickness**:* Min: ¼”/6mm Max: 1¼”/31mm

b Clear any insulation at least 3” from any part of the Fixture or Driver Enclosure.

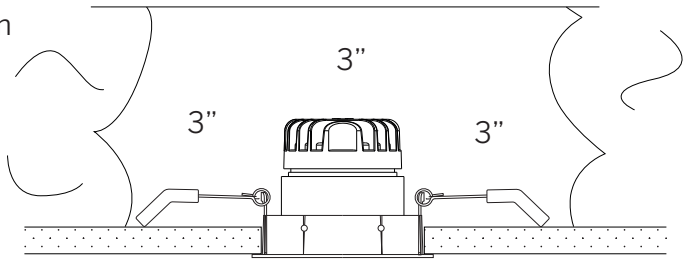

Step 3 - *Wire Luminaire*

*See **Series Wiring Diagrams** on page 3. Select relevant Driver Diagram starting on page 4 of this document. For more detailed information, see the Driver Information pages for this product on our website.*

a Pull low voltage cable from Remote Drivers through Ceiling.

IMPORTANT! Add a bit of slack to cable such that there isenough for Luminaire to be fully removed without tugging on Driver.

b Connect incoming low voltage cable to 5” lead with Two-Wire Quick Connect on Fixture.

Need Help?

Step 4 - ***Install Luminaire***

- **a** Rotate Luminaire such that Opening faces Wall.
- **b** Bend Spring Clips upward and insert Fixture into hole.
- **c** Fixture is seated when Clips spring back up above ceiling to secure.
- **d** *Energize!*

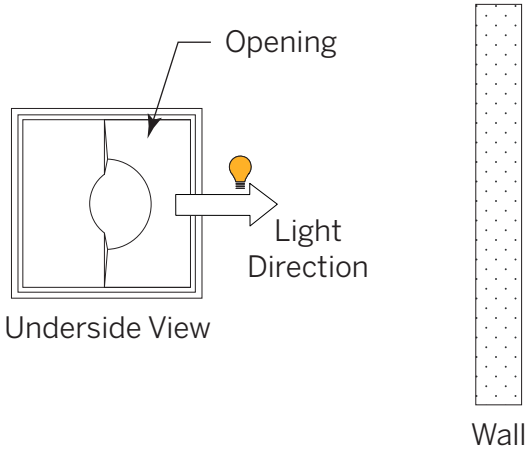

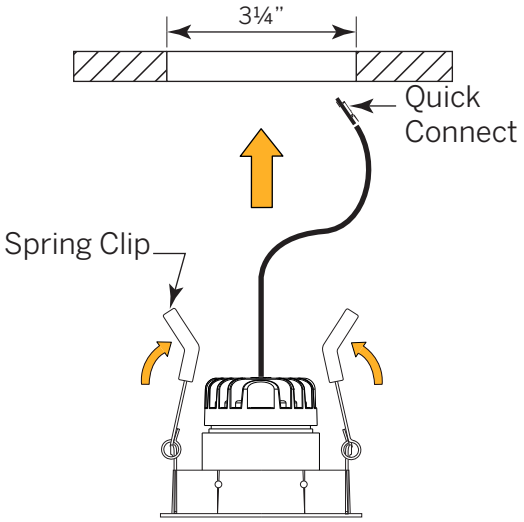

To Remove Luminaire

Luminaire may be removed by gripping Bezel with fingertips and pulling down. Spring Clips will compress allowing for a better hold to pull fixture out further.

Series Wiring Diagrams

NOTE: Wago™ Connectors illustrated above not included with fixture.

Multiple Fixtures/One Driver

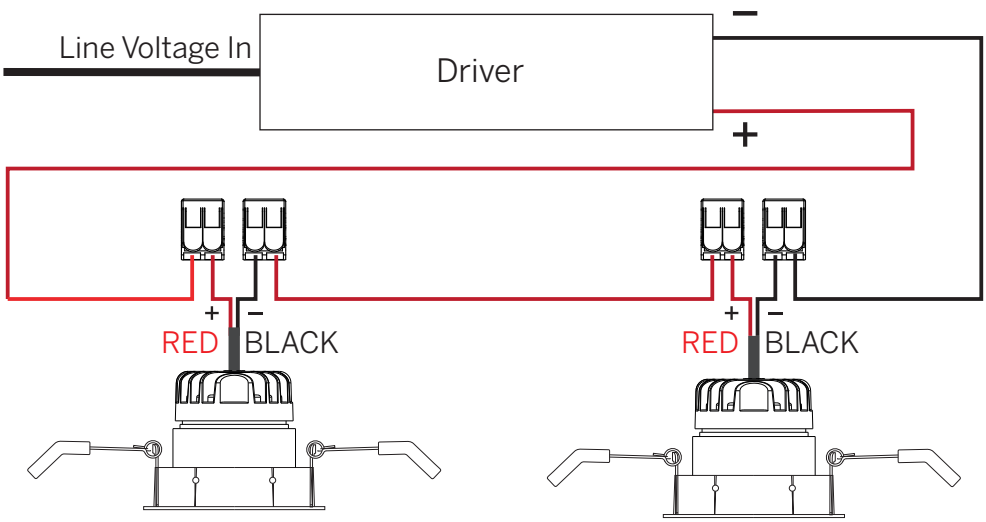

Multiple Fixtures/One Driver, Multiple Outputs

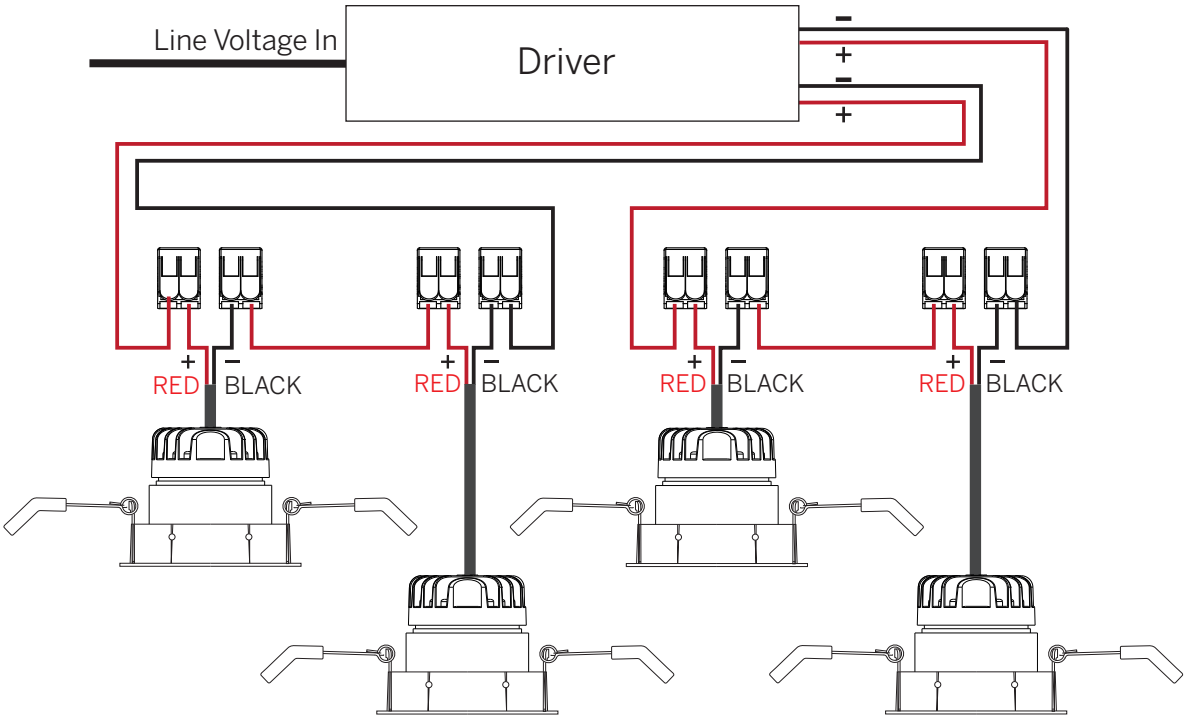

Need Help?

Driver Wiring Diagrams

S010/RS010 = eldoLED 0-10V 1% dimming, 120-277V p. 3, 4
D010/RD010 = eldoLED 0-10V 0.1% dimming, 120-277V p. 4, 5
SPH/RSPH = Phase (2 Wire) 3% dimming, 120V only p. 6
D2S/RD2S = DALI-2 (DT6) for Static White 0.1% dimming, 120-277V p. 6, 7
RD2T = DALI-2 (DT8) for Tunable White, 0.1% dimming, 120-277V p. 8

NOTE: Drivers are available as integral or remote, unless otherwise noted.

S010/RS010 = eldoLED 0-10V 1% dimming, 120-277V

22W (Integral & Remote)

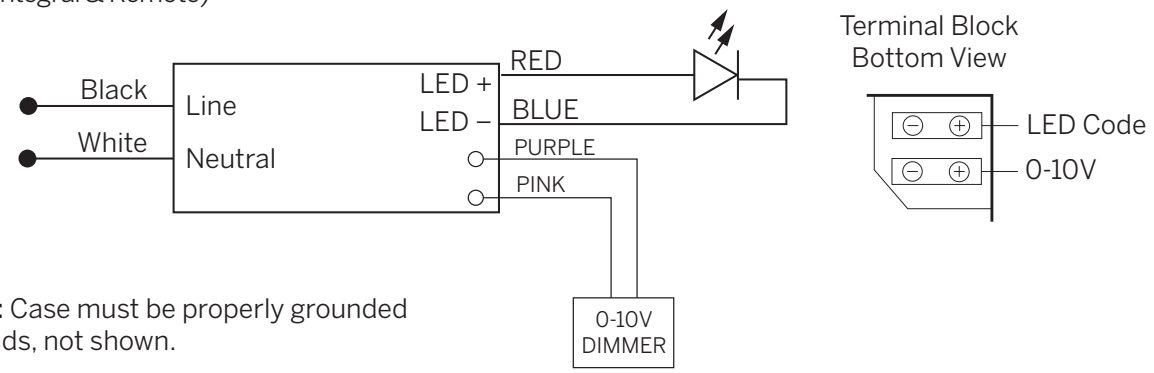

NOTE: Case must be properly grounded via studs, not shown.

50W (Remote only)

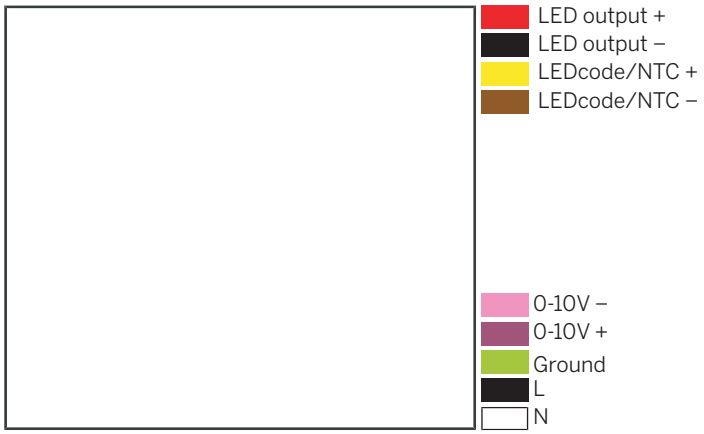

Need Help?

Driver Wiring Diagrams

S010/RS010 = eldoLED 0-10V 1% dimming, 120-277V (continued)

100W (Remote only)

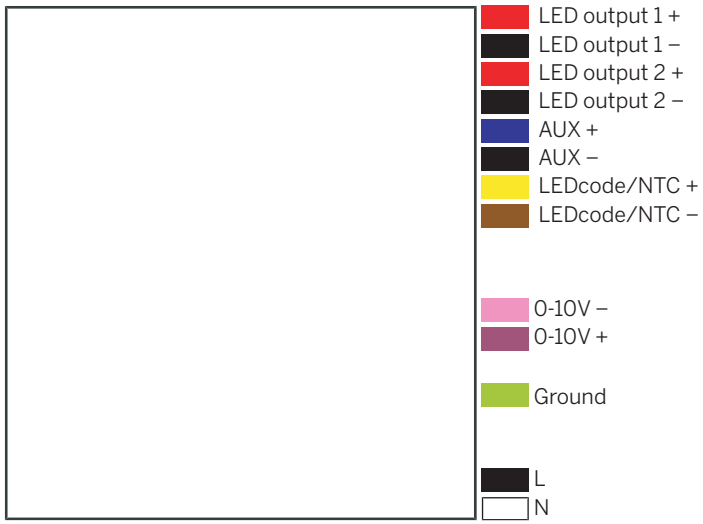

D010/RD010 = eldoLED 0-10V 0.1% dimming, 120-277V

22W (Integral & Remote)

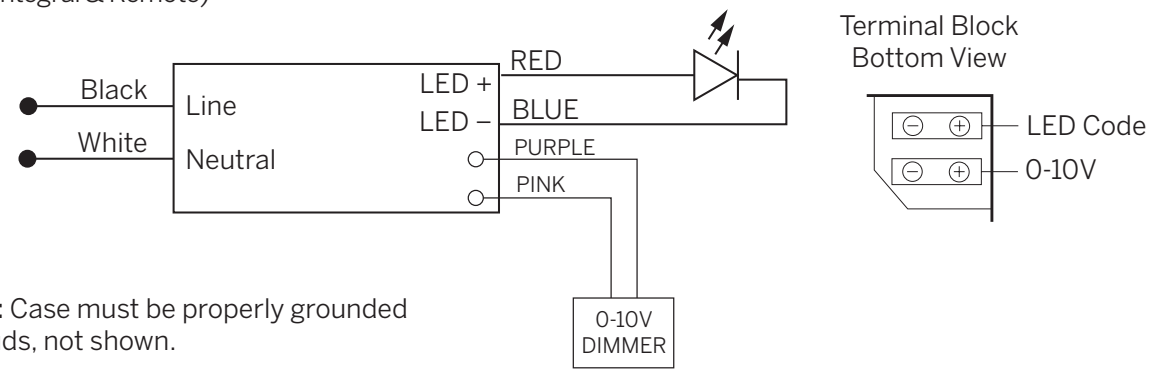

NOTE: Case must be properly grounded via studs, not shown.

Driver Wiring Diagrams

D010/RD010 = eldoLED 0-10V 0.1% dimming, 120-277V (continued)

50W (Remote only)

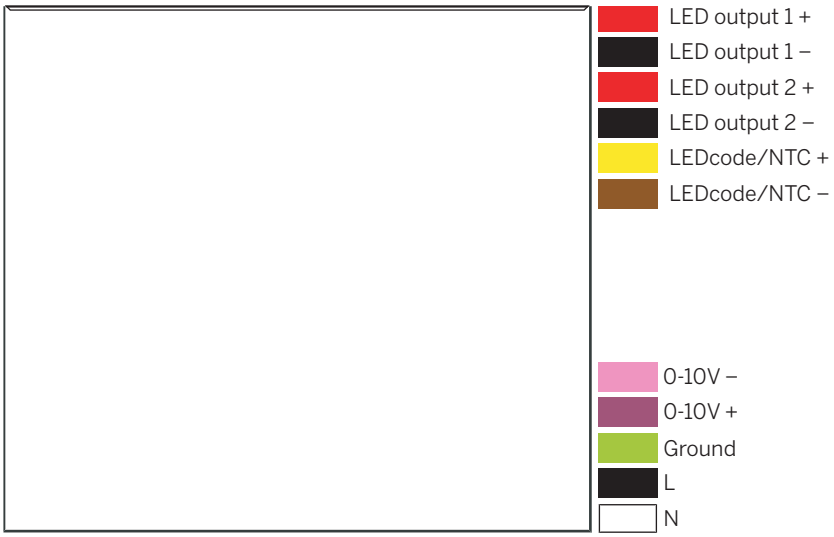

100W (Remote only)

Driver Wiring Diagrams

SPH/RSPH = Phase (2-wire) 3% dimming, 120V only

20W

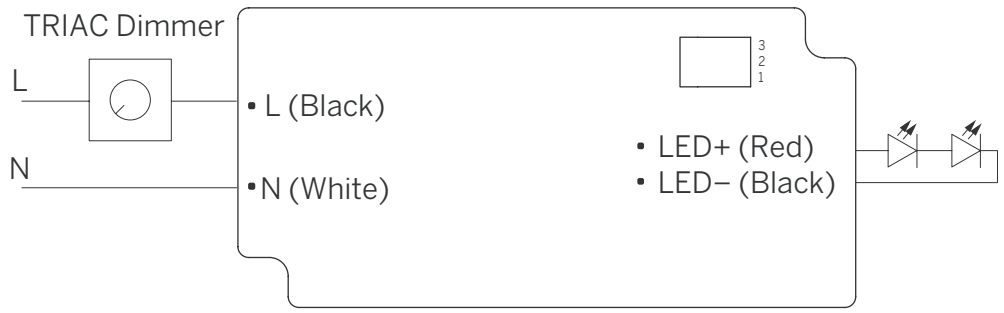

D2S/RD2S = DALI-2 (DT6) for Static White 0.1% dimming, 120-277V

22W (Integral & Remote)

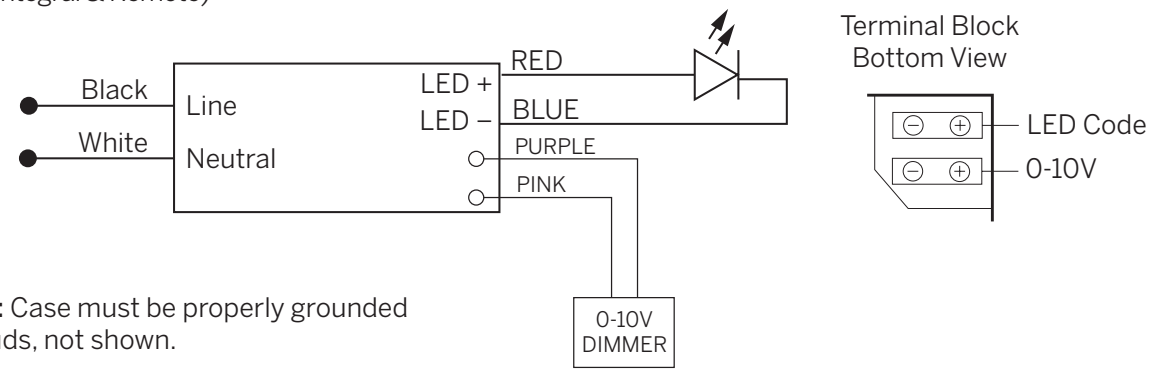

NOTE: Case must be properly grounded via studs, not shown.

Driver Wiring Diagrams

D2S/RD2S = DALI-2 (DT6) for Static White 0.1% dimming, 120-277V (continued)

50W (Remote only)

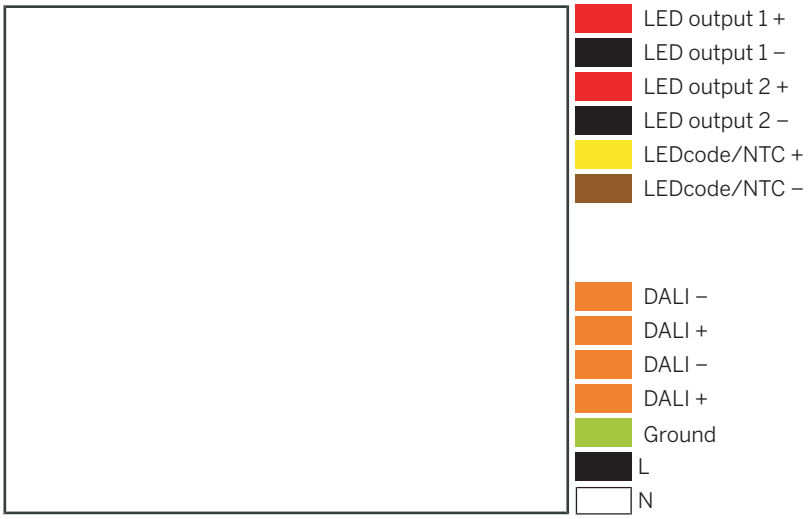

100W (Remote only)

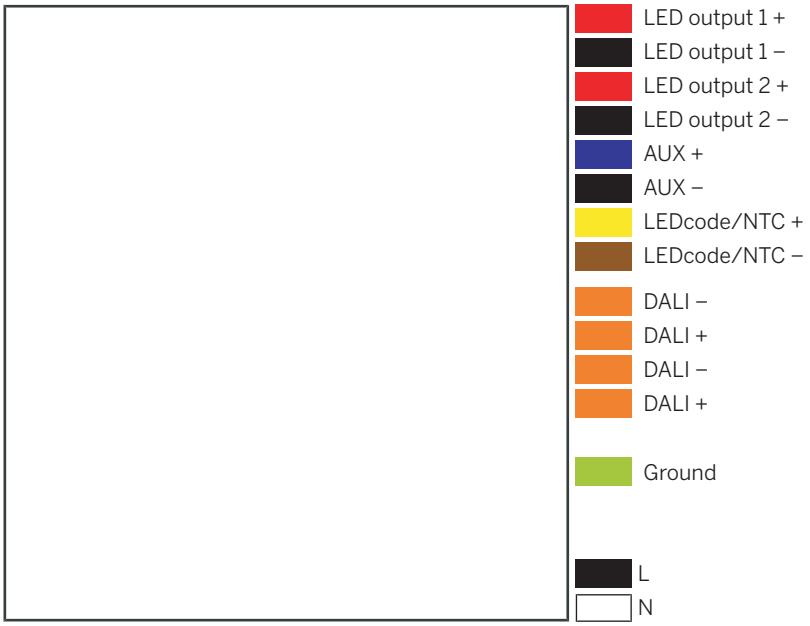

Driver Wiring Diagrams

RD2T = DALI-2 (DT8) for Tunable White 0.1% dimming, 120-277V

30W (Remote only)