Flex 50 x 30

Vertical

inter•lux

Installation Instructions

Luminaires must be installed by a qualified electrician. Check with local and national codes for proper installation.

To prevent electrical shock disconnect electrical supply before installation or servicing.

Never connect a Fixture to a Live Driver!!!

Contractor is responsible for adequately reinforcing walls and/or ceilings to support fixture weight. Provide blocking when necessary.

Step 1 - *Open the Box*

Unpack luminaire unit(s). The Flex family of luminaires require special handling. They are supplied in lengths specified at the time of order, and are delivered on a reel enclosed in a large anti-static bag. Remote Drivers and Boxes may be ordered from Inter-lux separately.

Do not *attempt to bend this Luminaire in the* ***horizontal*** *plane!*

24VDC Constant Voltage

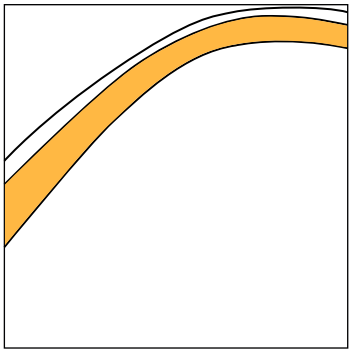

Vertical **50 x 30**

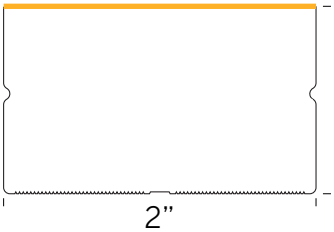

1.18"
30mm

2"
50mm

Static White	*Tunable White*	*RGB*	*Pixel Tunable White*
Static White High Output	*Tunable White High Output*	*RGBW*	*Pixel RGB*
Static White Free Cut	*Warm Dim*	*Pixel Static White*	*Pixel RGBW*

Minimum Vertical Bend ∅ ≥ 19.7"/500mm

NOTE: Yellow (or light gray in B/W) indicates a lit surface.

Working Temperature Range
−40° to 130°

Step 2 - *Handling the Luminaire*

a The delicate nature of the Flex Vertical Luminaire necessitates that unpacking, handling, and installing this fixture be done by ***at least*** two people.

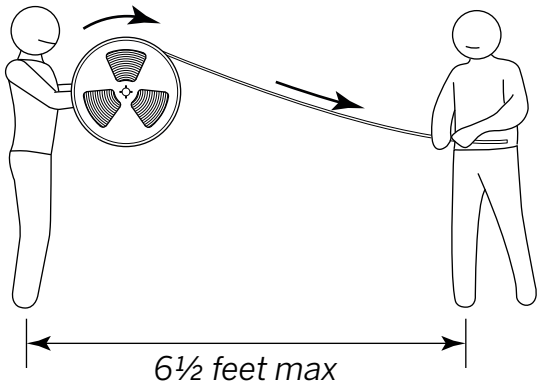

Need Help?

Step 2 - ***Handling the Luminaire***

b The Flex 50 x 30 Vertical Luminaires may be represented by the illustration at right. *All* Vertical Luminaires bend in the ***vertical plane only*** - Up or Down.

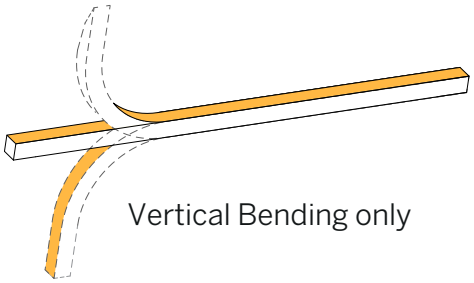

c Observe the following cautions during installation:

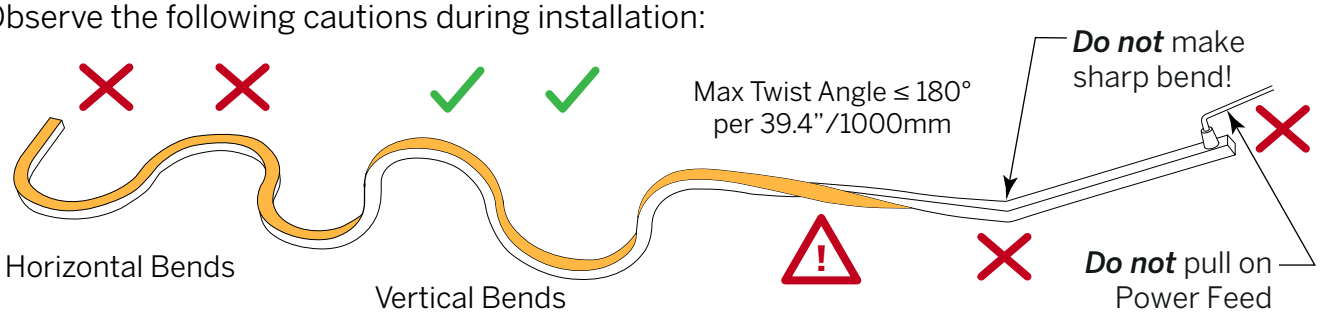

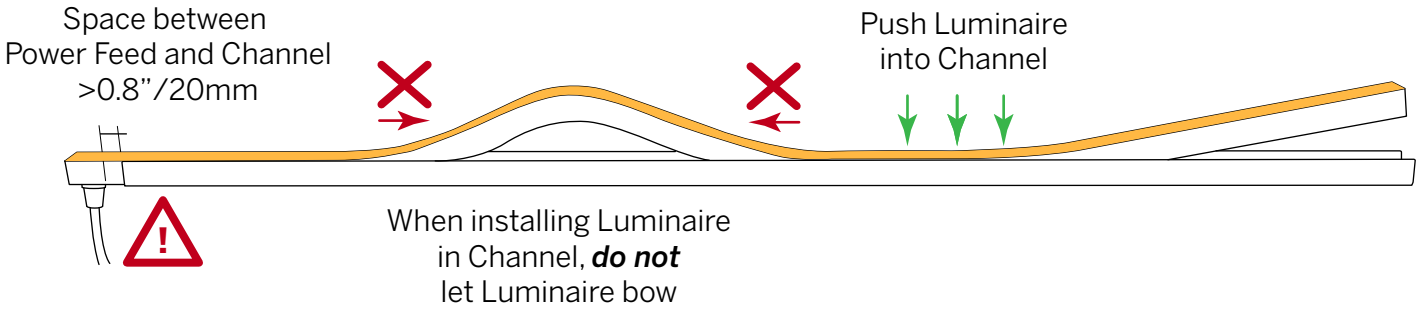

Step 3 - ***Accessories***

Aluminum Clip/Profile

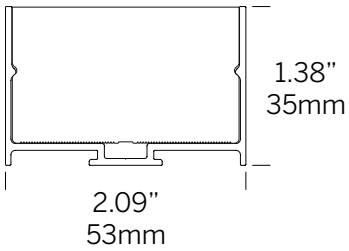

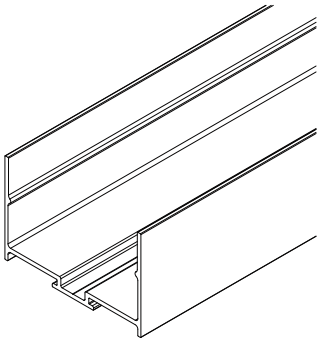

Available in:
1.18"/30mm Silver[1, 2]
39.37"/1000mm Silver[1, 3]

Need Help?

Step 3 - ***Accessories*** *(continued)*

Aluminum Bendable Profile

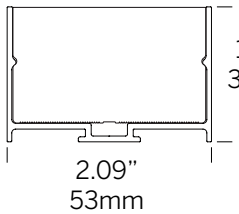

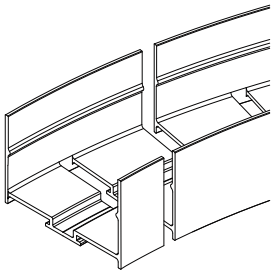

Available in:
39.4"/1000mm Silver[1, 4]

Stainless Bendable Profile

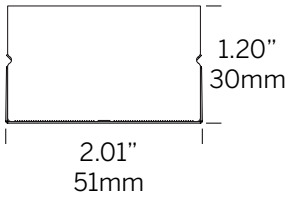

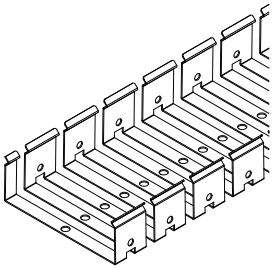

Available in:
39.4"/1000mm Silver[1, 4]

NOTES:

1 Mounting screws and anchors supplied by others.
2 All clip-length profiles are pre-drilled for mounting.
3 Full-length profiles are pre-drilled with (3) holes per 39.37"/1000mm. Additional holes may be drilled, as needed.
4 Flexible Profiles have pre-drilled holes in each segment for easy positioning.

Step 4 - ***How to Field Cut the Flex Luminaire***

(Skip to ***Step 5*** if not applicable)

All versions of the Flex 50 x 30 Vertical Luminaire (except the *Free Cut*) have a narrow transparent window on the bottom or side with Cut Lines that look like one of those shown at right.

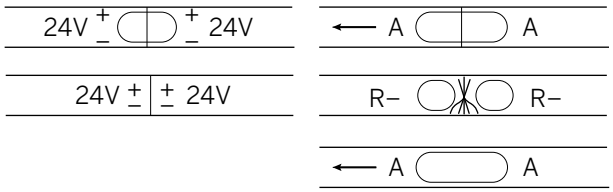

The ovals represent copper pads. It is imperative to cut on these lines to maintain a fully lit luminaire. If Flex is not cut on these lines, there is a risk that a portion of the luminaire near the cut will not power on.

The *Free Cut* version may be cut anywhere without concern that some LED's will go dark.

IMPORTANT! All cuts are to be taken from the non-powered end!

Need Help?

Step 4 - ***How to Field Cut the Flex Luminaire*** *(continued)*

Cut Intervals

Static White
LED Type S05 - 2”/50mm
LED Type S12 - 2”/50mm

Static White High Output
LED Type S13 - 2.5”/63mm

Static White Free Cut
LED Type SF05 - n/a
LED Type SF12 - n/a

Tunable White
LED Type CT10 - 2.5”/63mm

Tunable White High Output
LED Type CT10 - 3.3”/83mm
LED Type CT13 - 3.3”/83mm

Warm Dim
LED Type 14R - 3.3”/83mm

RGB
LED Type L12 - 3.9”/100mm

RGBW
LED Type L16 - 3.9”/100mm

Pixel Static White
LED Type DMX10P13 - 3.9”/100mm

Pixel Tunable White
LED Type CTDMX10P13 - 3.9”/100mm

Pixel RGB
LED Type DMX02P14 - 19.7”/500mm
LED Type DMX10P14 - 3.9”/100mm

Pixel RGBW
LED Type DMX10P16 - 3.9”/100mm

It is important that Flex be cut at 90° across the fixture and not at an angle.

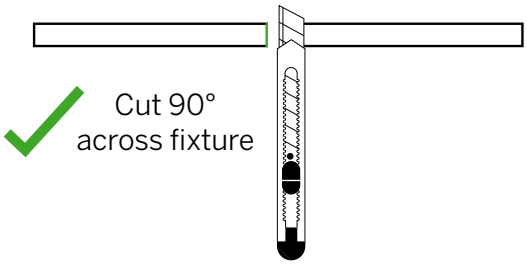

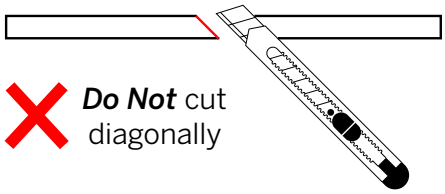

Apply End Cap

With this new cut, an End Cap needs to be applied. (1) End Cap is supplied with each length of Flex. For example, if 300 feet was purchased in a single length, one End Cap is supplied. But if three 100 foot lengths were purchased, three End Caps would be supplied. Additional End Caps are available, if needed.

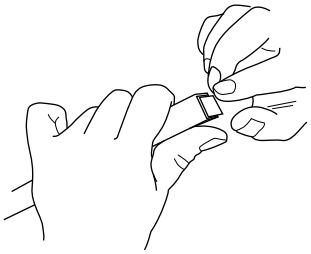

a Place Silicone Square at freshly cut end. Orient Square such that it lays entirely within confines of end shape.

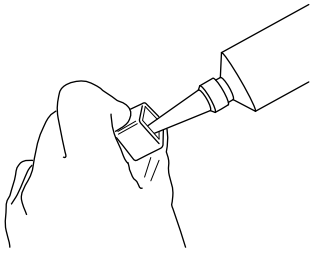

b Fill interior bottom and sides of End Cap with supplied silicone* sealant. Set aside.

Step 4 - ***How to Field Cut the Flex Luminaire*** *(continued)*

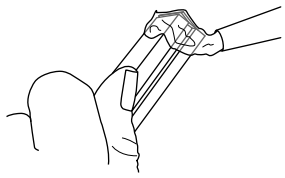

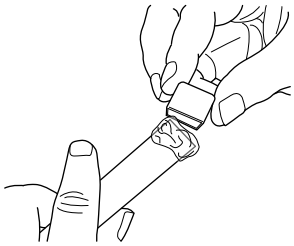

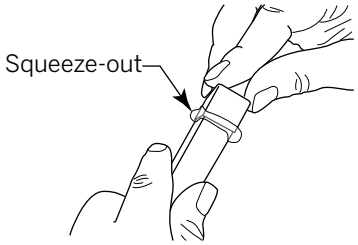

c Squeeze silicone sealant all around the last ½" of the newly cut end.

d Mount End Cap.

e Push End Cap onto Luminaire End. Wipe squeeze-out off and set aside to dry for 30-60 minutes.

**Supplied silicone sealant is proprietary and specially formulated.*

Step 5 - ***Install Luminaire***

The Flex 50 x 30 Vertical sits in the Aluminum and Stainless Flexible Profiles via a friction fit.

When using Profiles, the Feed Cable end must sit *outside* of Profile. The distance between the Power Feed - whether on the Side Left, Side Right, Bottom or End - and the beginning of the the Profile should be at least 0.8" (20mm). See illustrations at right.

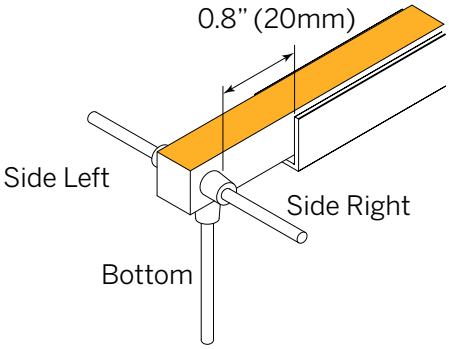

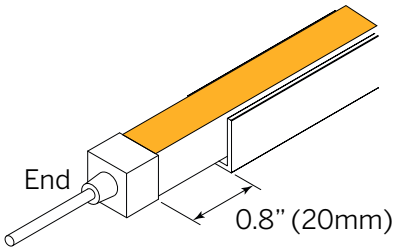

Generic Luminaires Shown

a Drill mounting holes in Aluminum Profile as needed, at least one every 12". Stainless Flexible Profile is predrilled.

b Fasten the Aluminum Profile(s) or Flexible Profile(s) to surface with appropriate screws (by others).

c Space Clips no more than 12 inches (300mm) apart and within 2 inches (50mm) of each bend.

d Press Luminaire into Clips or Profiles firmly.

e Wire Luminaire according to Driver specified. See Illustrations in ***Step 6***, pages 6-12.

f *Energize!*

Need Help?

Step 6 - ***Wire Luminaire***

The following wiring diagrams for Constant Voltage remote drivers are included here for reference. For additional details, such as Maximum Wiring Distance, compatible dimmers, and driver box dimensions, please refer to the Driver Information Guide on our website.

D010 = eldoLED, Non-Dim or 10% 0-10V dimming (120-277V)

For:
Static White
Static White High Output
Static White Free Cut

Non-Dimming

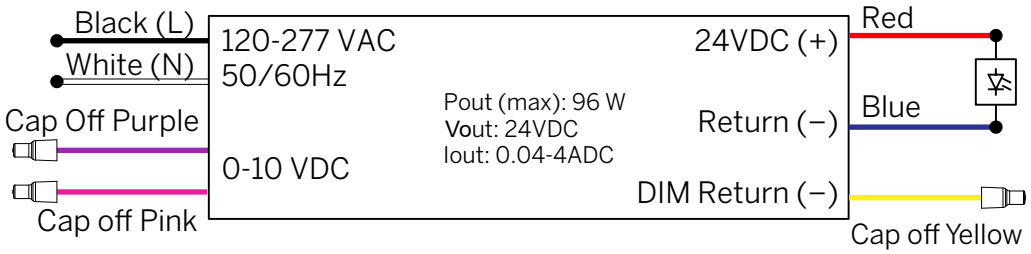

Dimming

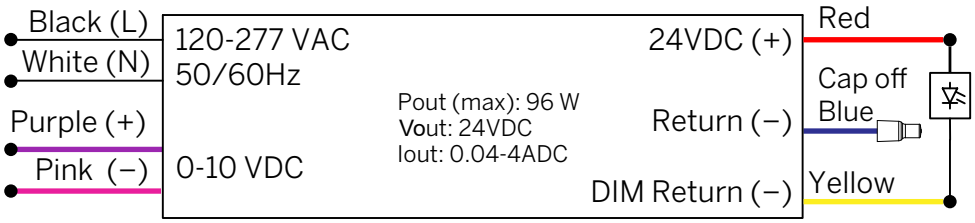

WARNING: If not connected to a 0-10V dimmer, driver MUST be wired as Non-dim. Not doing so can cause the driver and the fixtures to fail prematurely.

This space intentionally left blank.

Step 6 - ***Wire Luminaire*** *(continued)*

EL96 = eldoLED 0-10V, 0.1% dimming (120-277V)

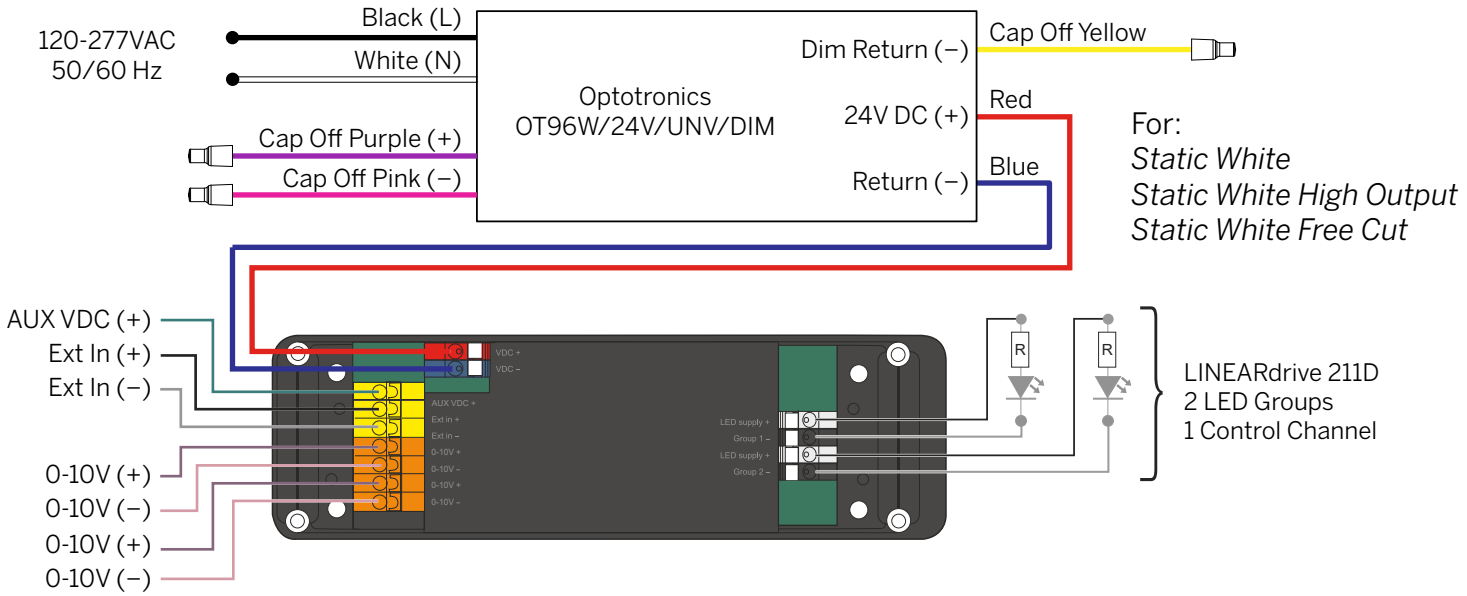

For:
Static White
Static White High Output
Static White Free Cut

DPH = Phase Dimming, 1% dimming (120V only)

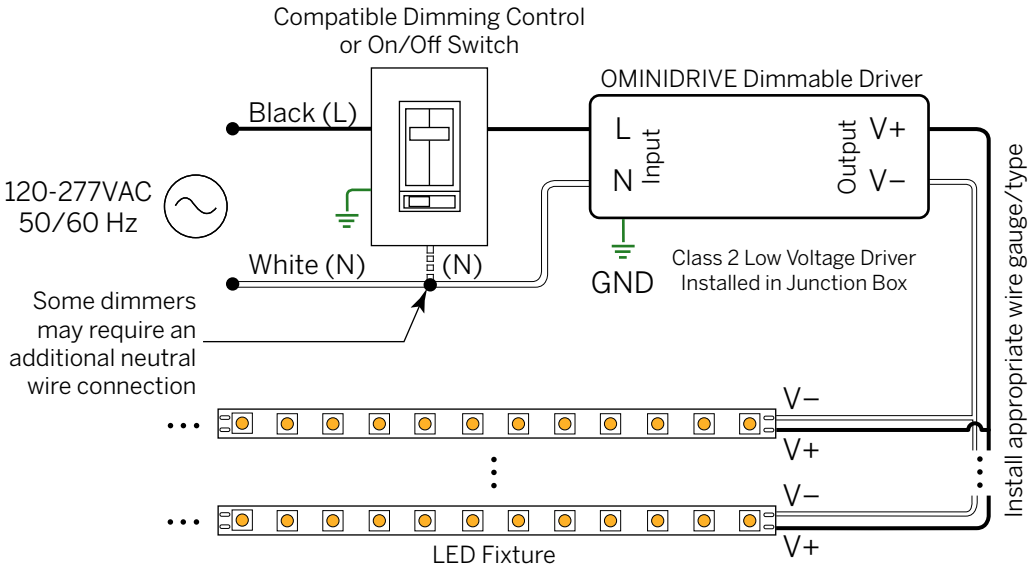

For:
Static White
Static White High Output
Static White Free Cut

Step 6 - ***Wire Luminaire*** *(continued)*

L3D0E = Lutron Hi-lume Premier 0.1% EcoSystem (120-277V)

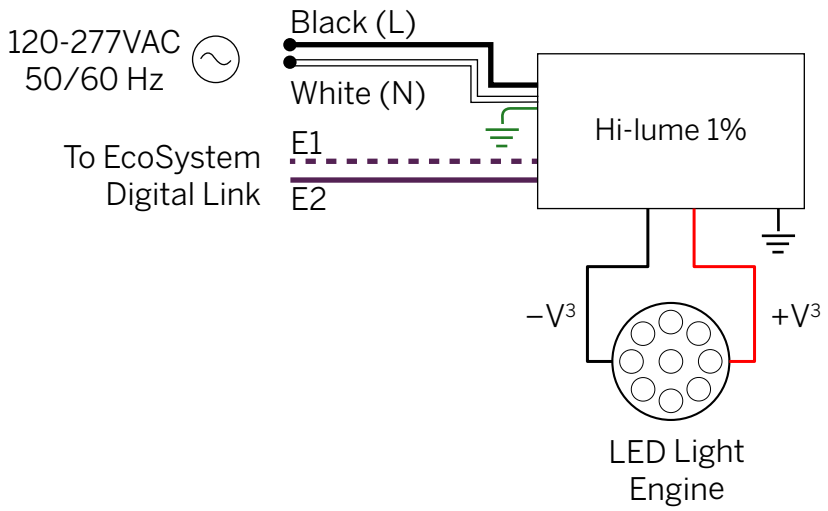

For:
Static White
Static White High Output
Static White Free Cut

UNV96-WL = 0-10V/Phase Dim 96W Wet Location, 1% dimming (120-277V)

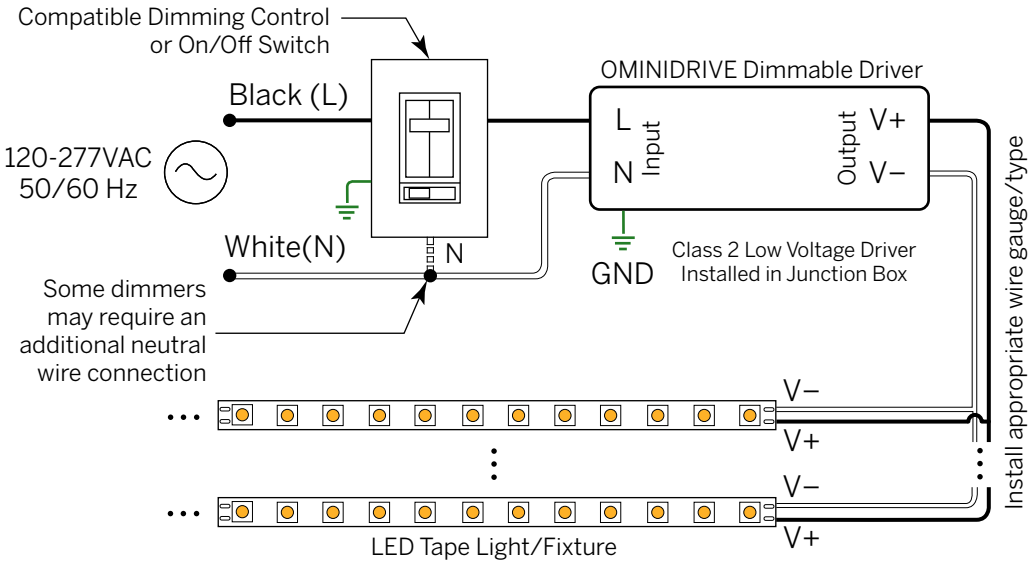

For:
Static White
Static White High Output
Static White Free Cut

Step 6 - ***Wire Luminaire*** *(continued)*

UNV384-WL = 0-10V/Phase Dim 384W Wet Location, 1% dimming (120-277V)

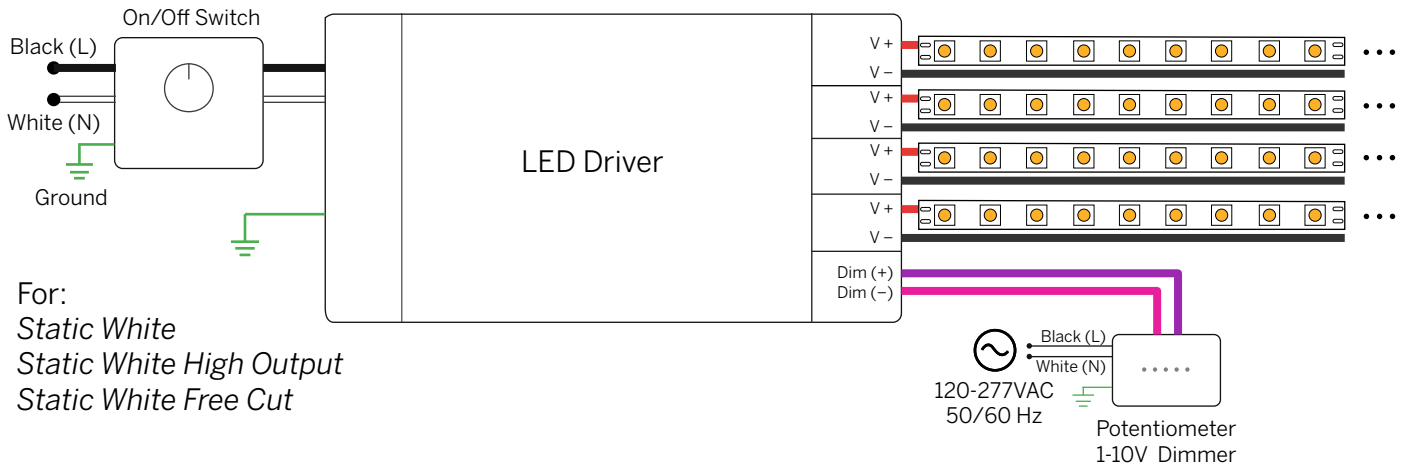

For:
Static White
Static White High Output
Static White Free Cut

DALI-DT6 = eldoLED DALI-2 (DT6), 0.1% dimming (120-277V)

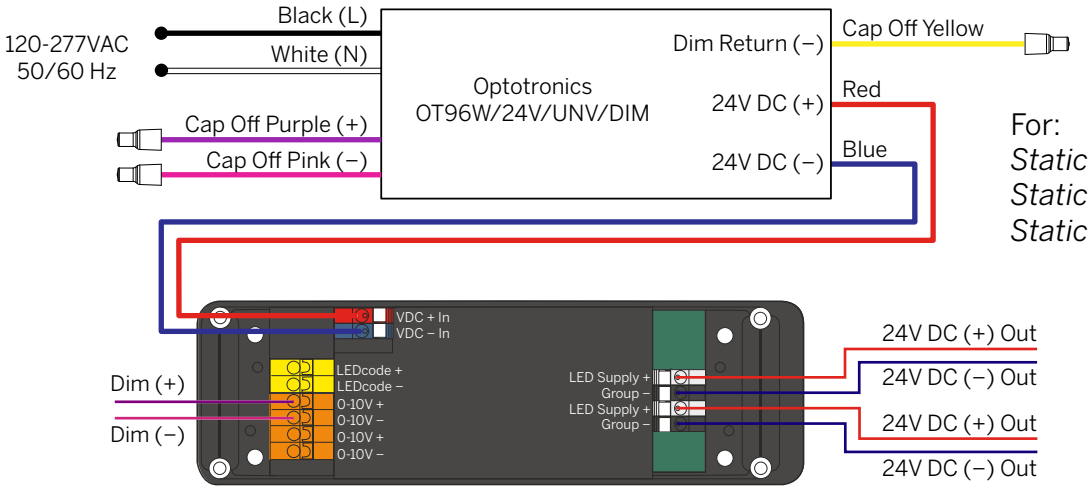

For:
Static White
Static White High Output
Static White Free Cut

LINEARdrive 211D
2 LED Groups
1 Control Channel

Step 6 - ***Wire Luminaire*** *(continued)*

DALI-DT6 = eldoLED DALI-2 (DT6), 0.1% dimming (120-277V)

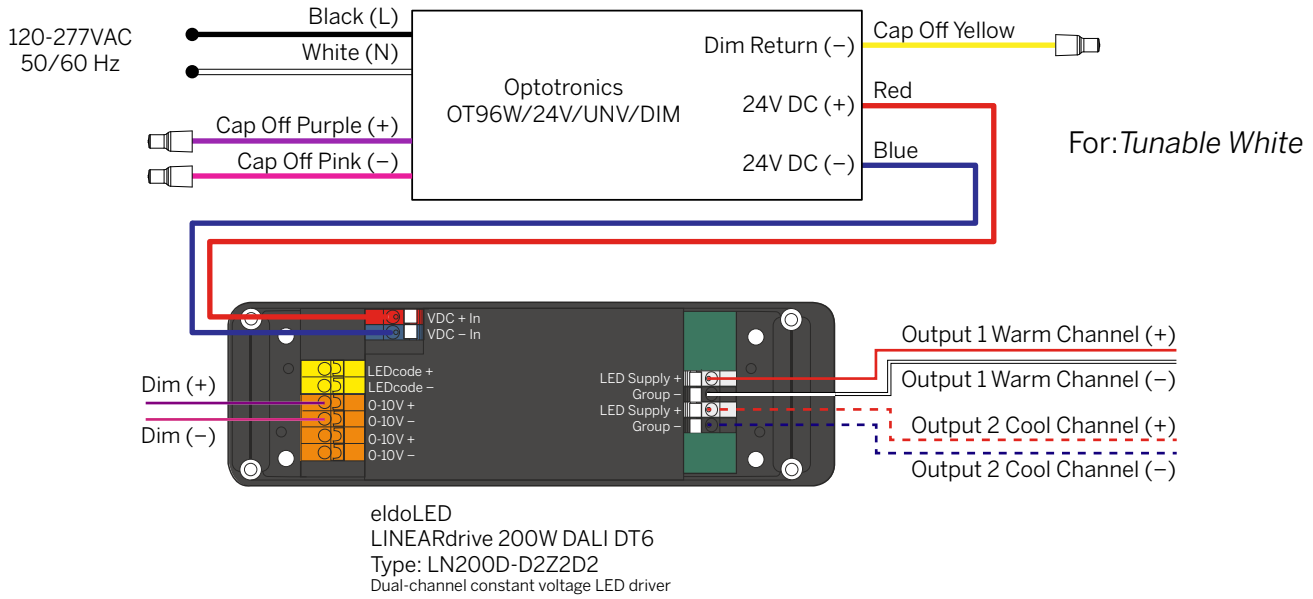

DALI-DT8 = eldoLED DALI-2 (DT8), 0.1% dimming (120-277V)

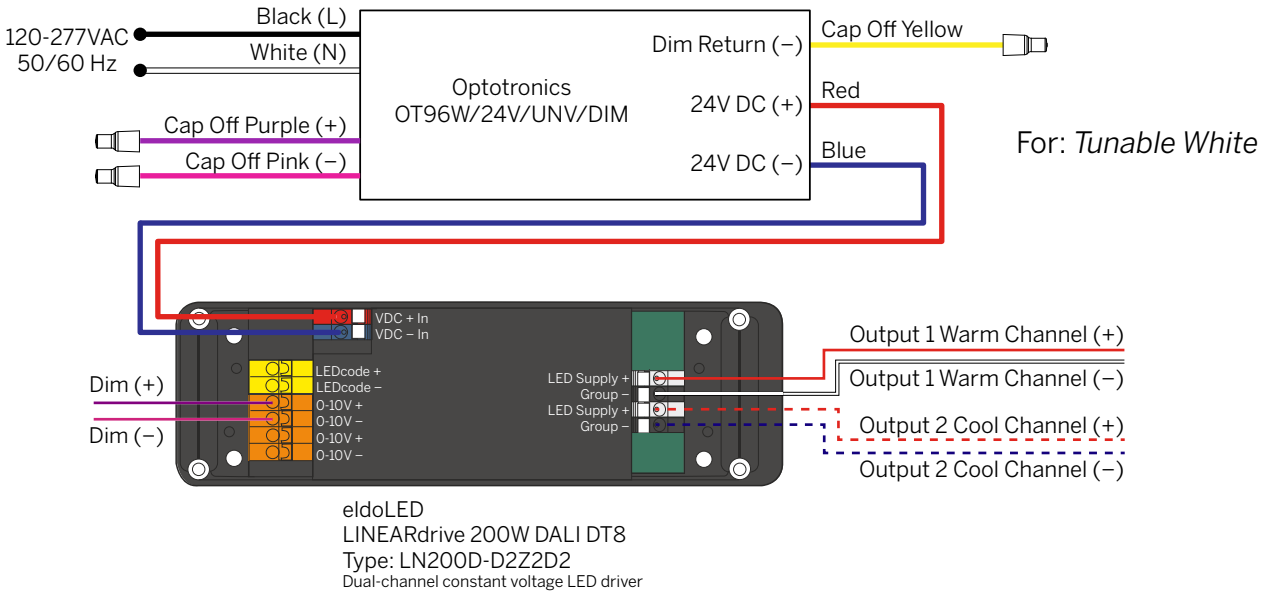

Step 6 - ***Wire Luminaire*** *(continued)*

MAGSDM96-WD = 0-10V/Phase Dim 96W, 0.1% CCR dimming (120-277V) Phase - 120V only

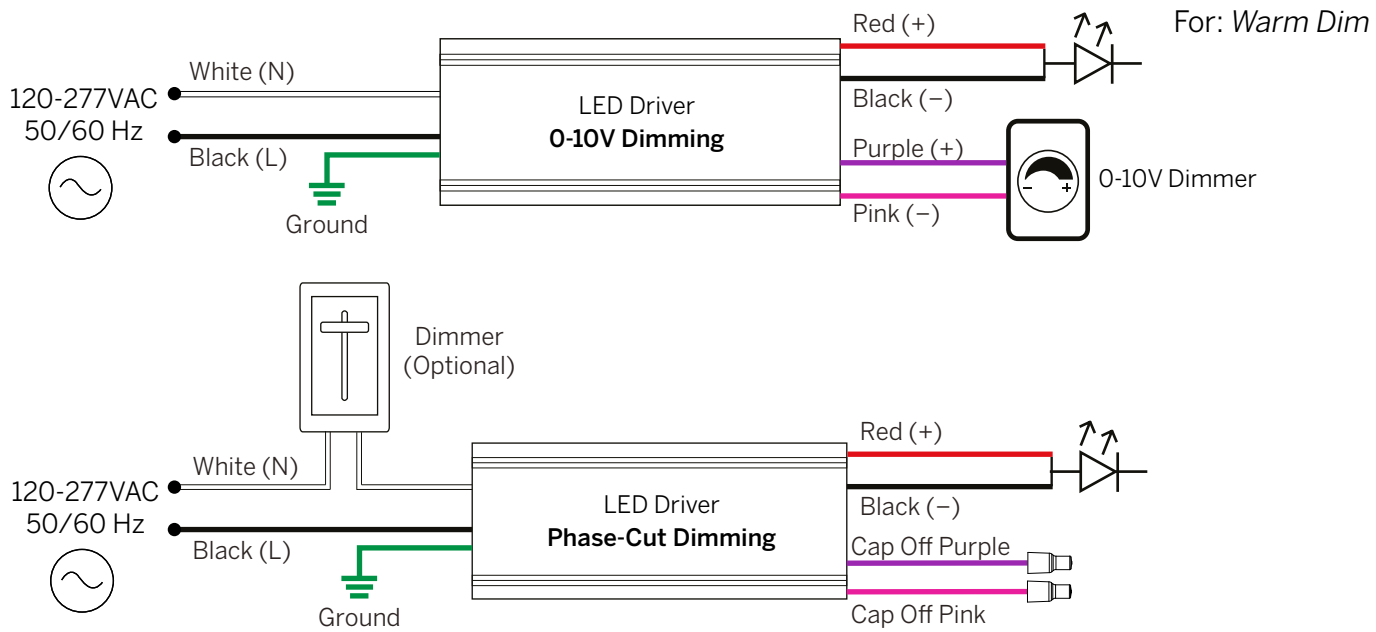

This space intentionally left blank.

Step 6 - ***Wire Luminaire*** *(continued)*

DMX = eldoLED 24V, 0.1% DMX Dimming

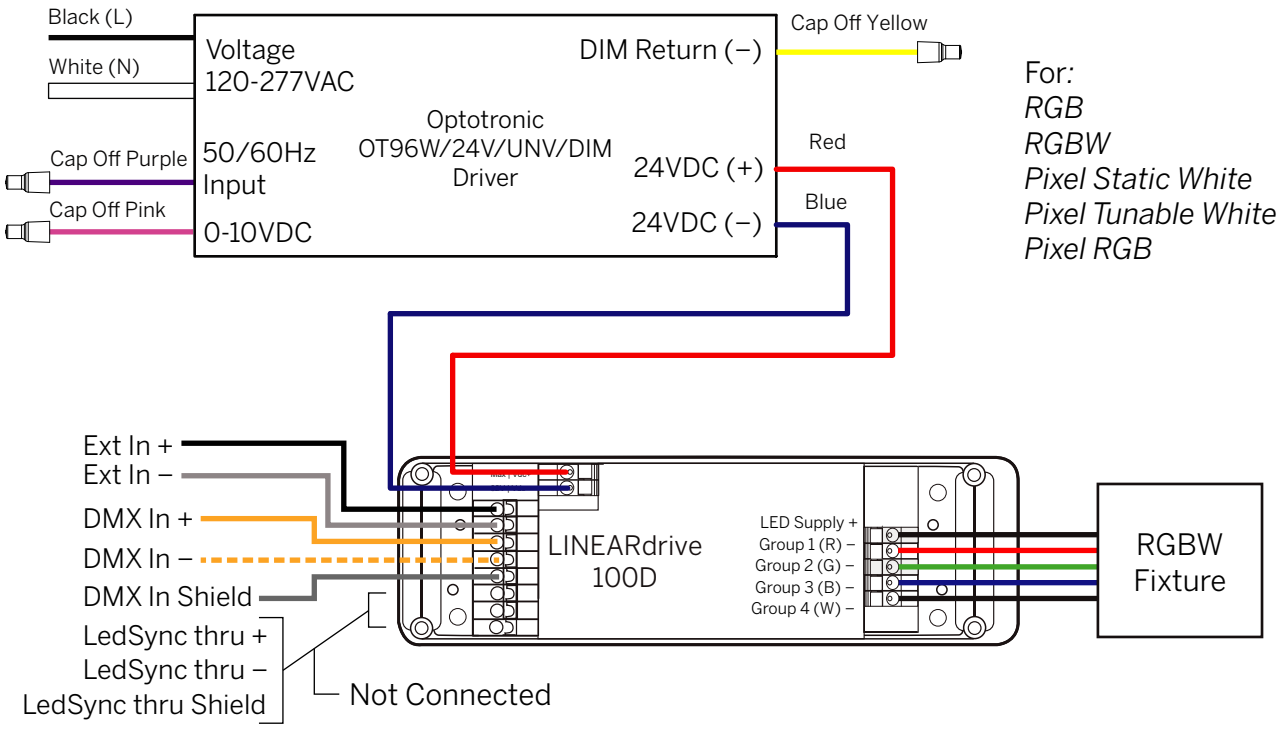

NOTE: A second OT96W & LINEARdrive 100D pair may be daisy-chained to the first set of DMX connectors (DMX In +, DMX In –, DMX In Shield). A third pair may be daisy-chained to the second, etc.