Flex 10 x 10
Multi Honeycomb

inter•lux

Installation Instructions

Luminaires must be installed by a qualified electrician. Check with local and national codes for proper installation.

To prevent electrical shock disconnect electrical supply before installation or servicing.

Never connect a Fixture to a Live Driver!!!

Contractor is responsible for adequately reinforcing walls and/or ceilings to support fixture weight. Provide blocking when necessary.

Step 1 - *Open the Box*

Unpack luminaire unit(s). The Flex family of luminaires require special handling. They are supplied in lengths specified at the time of order, and are delivered on a reel enclosed in a large anti-static bag. Remote Drivers and Boxes may be ordered from Inter-lux separately.

24VDC Constant Voltage

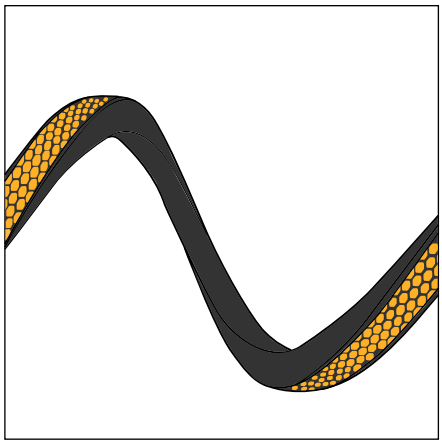

10 x 10 Multi Honeycomb

Static White
Static White High Output

Minimum Horizontal and Vertical Bend Ø ≥ 7.9"/200mm

Working Temperature Range
−40° to 130°

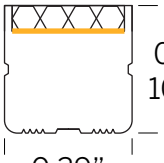

NOTE: Yellow (or light gray in B/W) indicates a lit surface.

Step 2 - *Handling the Luminaire*

a The delicate nature of the Multi Honeycomb Luminaire necessitates that unpacking, handling, and installing this fixture be done by ***at least*** two people.

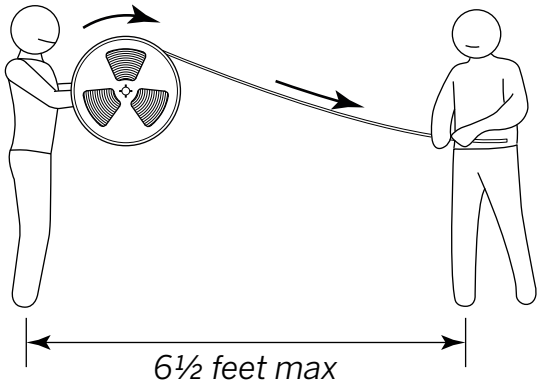

Need Help?

Step 2 - ***Handling the Luminaire*** *(continued)*

b The Flex 10 x 10 Multi Honeycomb Luminaire may be represented by the illustration at right. *All* Multi Luminaires bend in both the ***horizontal and vertical planes*** - Up, Down, Left, and Right.

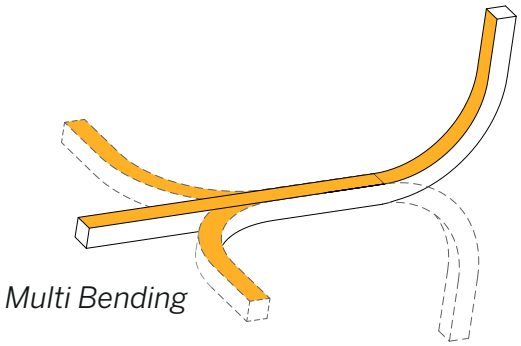

c Observe the following cautions during installation:

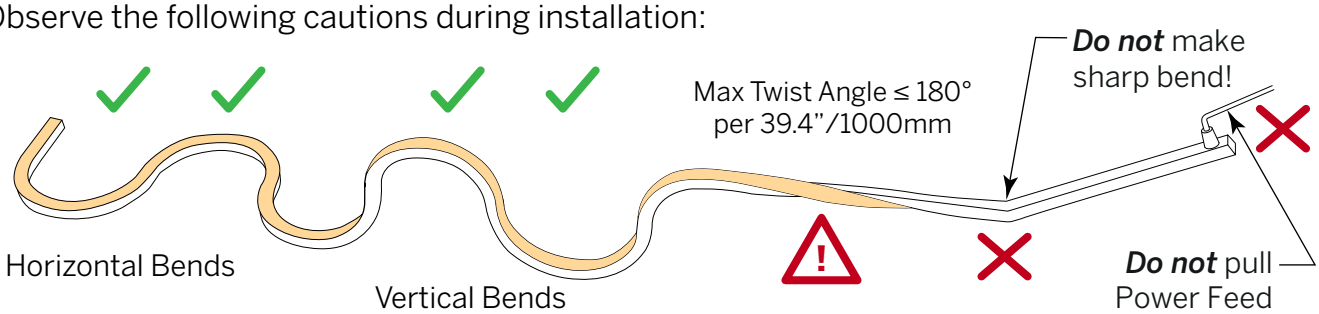

When installing Luminaire in Channel, ***do not*** let Luminaire bow

Step 3 - ***Accessories***

Aluminum Clip/Profile

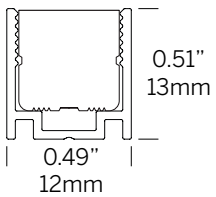

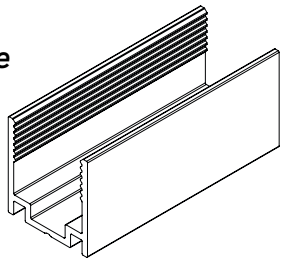

Available in:
1.18"/30mm Silver[1, 2]
1.18"/30mm Black[1, 2]
39.37"/1000mm Silver[1, 3]
39.37"/1000mm Black[1, 3]
78.74"/2000mm /Silver[1, 3]

Stainless Steel Clip

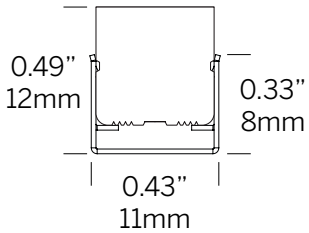

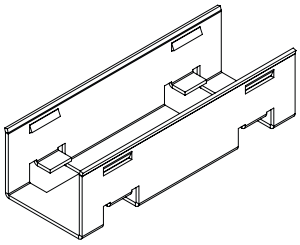

Available in:
1.18"/30mm Silver
1.18"/30mm Black

Need Help?

Step 3 - ***Accessories*** *(continued)*

Stainless Bendable Profile

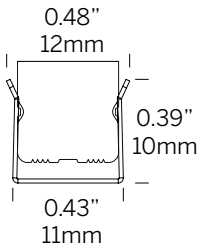

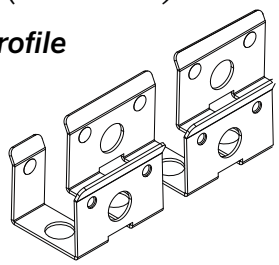

Available in:
39.37"/1000mm Silver[1, 4]
39.37"/1000mm Black[1, 4]

NOTES:
1 Mounting screws and anchors supplied by others.
2 All clip-length profiles are pre-drilled for mounting.
3 Full-length profiles are pre-drilled with (3) holes per 39.37"/1000mm. Additional holes may be drilled, as needed.
4 Flexible Profiles have pre-drilled holes in each segment for easy positioning.

Step 4 - ***How to Field Cut the Flex Luminaire***

(Skip to ***Step 5*** if not applicable)

All versions of the Flex Multi 10 x 10 Honeycomb Luminaire have a narrow transparent window on the bottom or side with Cut Lines that look like one of those shown at right.

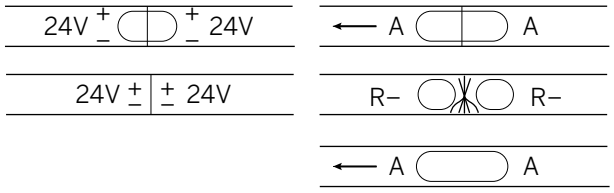

The ovals represent copper pads. It is imperative to cut on these lines to maintain a fully lit luminaire. If Flex is not cut on these lines, there is a risk that a portion of the luminaire near the cut will not power on.

Cut Intervals

Static White
LED Type S05 - 2.2"/56mm
LED Type S10 - 2.2"/56mm

Static White High Output
LED Type S10 - 2.2"/56mm

IMPORTANT! All cuts are to be taken from the non-powered end!

Step 4 - ***How to Field Cut the Flex Luminaire*** *(continued)*

a When cutting the Luminaire in the field, it is important to cut as perpendicular as possible. One way to do this is to use a pair of Miter Shears that has a fence 90° to the cut.

Generic Luminaire Shown

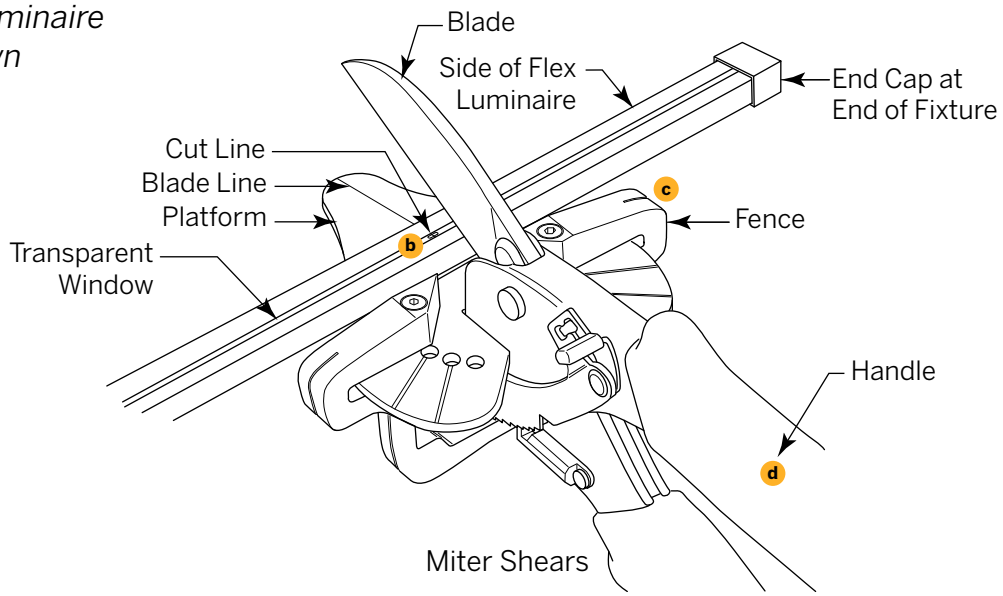

b Place Luminaire on Tool Platform with Transparent Window facing up as shown above. Line up Cut Line with Blade Line.

c Make sure Fence is at 0°, perpendicular to Blade.

d Squeeze Handles firmly to cut.

Whether one uses Miter Shears or not, it is important that Flex be cut at 90° across the fixture and not at an angle.

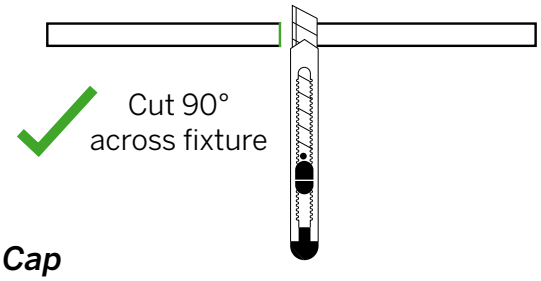

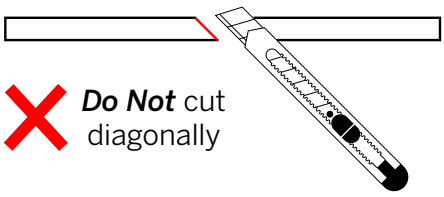

Apply End Cap

With this new cut, an End Cap needs to be applied. (1) End Cap is supplied with each length of Flex. For example, if 300 feet was purchased in a single length, one End Cap is supplied. But if three 100 foot lengths were purchased, three End Caps would be supplied. Additional End Caps are available, if needed.

Step 4 - ***How to Field Cut the Flex Luminaire*** *(continued)*

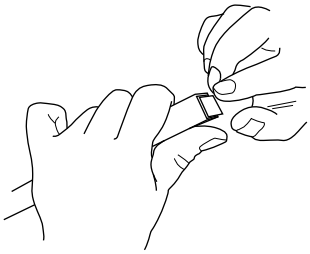

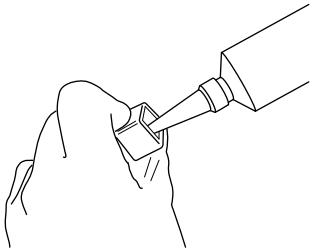

a Place Silicone Square at freshly cut end. Orient Square such that it lays entirely within confines of end shape.

b Fill interior bottom and sides of End Cap with supplied silicone* sealant. Set aside.

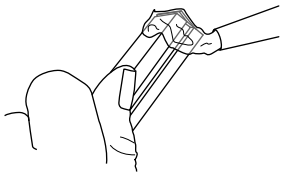

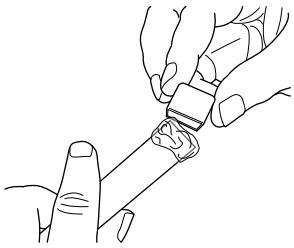

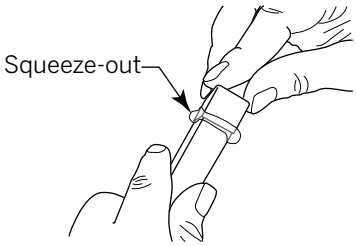

c Squeeze silicone sealant all around the last ½" of the newly cut end.

d Mount End Cap.

e Push End Cap onto Luminaire End. Wipe squeeze-out off and set aside to dry for 30-60 minutes.

**Supplied silicone sealant is proprietary and specially formulated.*

Step 5 - ***Install Luminaire***

The Flex Multi 10 x 10 Honeycomb sits in the Aluminum Clip or Profile via a friction fit. The Luminaire is retained in the Stainless Clip via small linear barbs that catch ribs on each side of the Luminaire. Similarly, The Luminaire is held in the Flexible Profile via small nubs that snap into grooves on each side of Fixture.

When using Profiles, the Feed Cable end must sit *outside* of Profile. The distance between the Power Feed - whether on the Side Left, Side Right, Bottom or End - and the beginning of the the Profile should be at least 0.8" (20mm). See illustrations at right and next page.

a Drill mounting holes in Aluminum Clip or Profile as needed, at least one every 12" on the Profile. The Stainless Mounting Clip and Flexible Profile are predrilled.

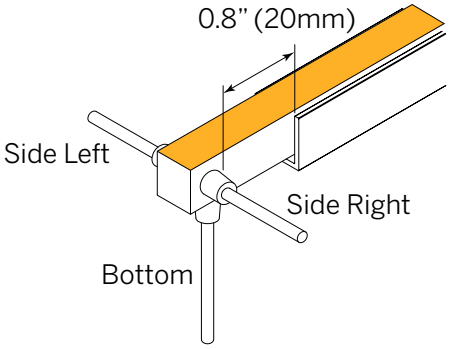

Generic Luminaire Shown

Need Help?

Step 5 - ***Install Luminaire*** *(continued)*

- **b** Fasten the Aluminum Profile(s) or Stainless Mounting Clips/Profile(s) to surface with appropriate screws (by others).
- **c** Space Clips no more than 12 inches (300mm) apart and within 2 inches (50mm) of each bend.
- **d** Press Luminaire into Clips or Profiles firmly.
- **e** Wire Luminaire according to Driver specified. See Illustrations in ***Step 6***, pages 6-9.
- **f** *Energize!*

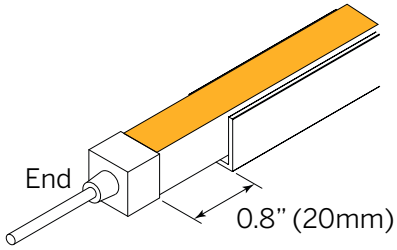

Generic Luminaire Shown

Step 6 - ***Wire Luminaire***

The following wiring diagrams for Constant Voltage remote drivers are included here for reference. For additional details, such as Maximum Wiring Distance, compatible dimmers, and driver box dimensions, please refer to the Driver Information Guide on our website.

D010 = eldoLED, Non-Dim or 10% 0-10V dimming (120-277V)

For:
Static White
Static White High Output

Non-Dimming

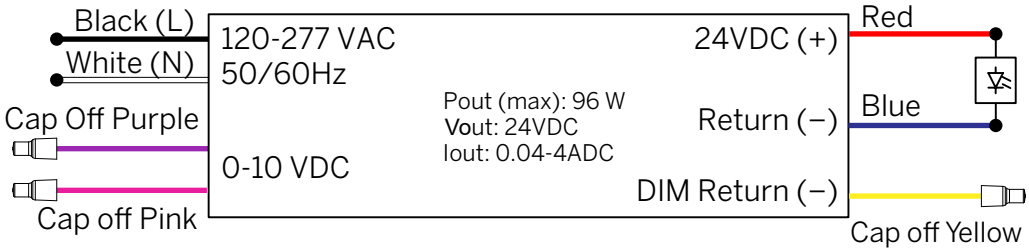

Dimming

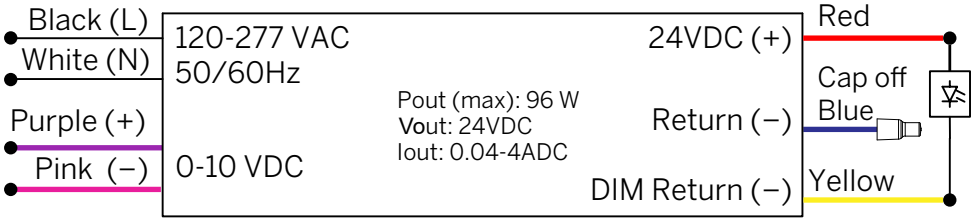

WARNING: If not connected to a 0-10V dimmer, driver MUST be wired as Non-dim. Not doing so can cause the driver and the fixtures to fail prematurely.

Need Help?

Step 6 - ***Wire Luminaire*** *(continued)*

EL96 = eldoLED 0-10V, 0.1% dimming (120-277V)

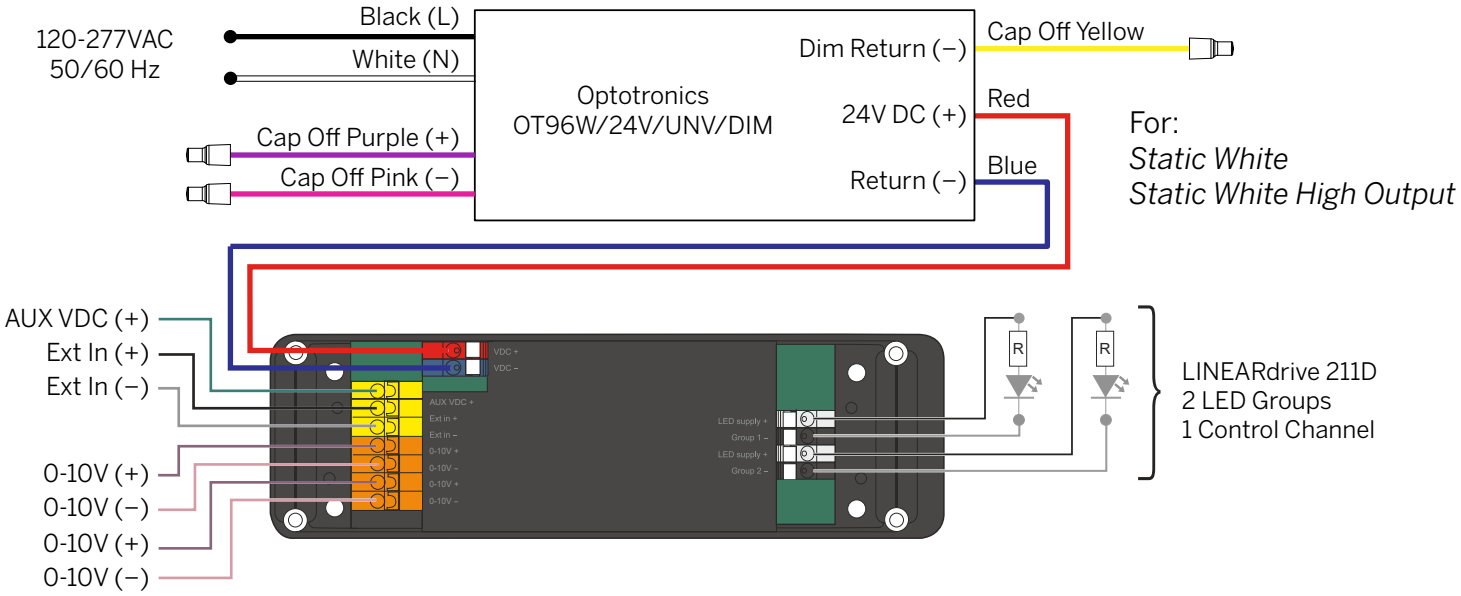

DPH = Phase Dimming, 1% dimming (120V only)

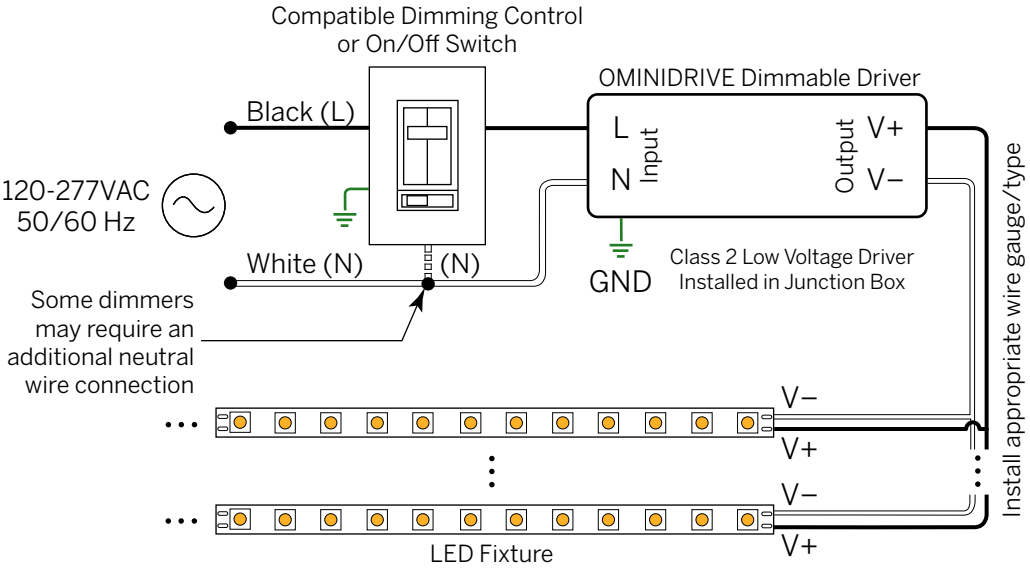

For:
Static White
Static White High Output

Step 6 - ***Wire Luminaire*** *(continued)*

L3D0E = Lutron Hi-lume Premier 0.1% EcoSystem (120-277V)

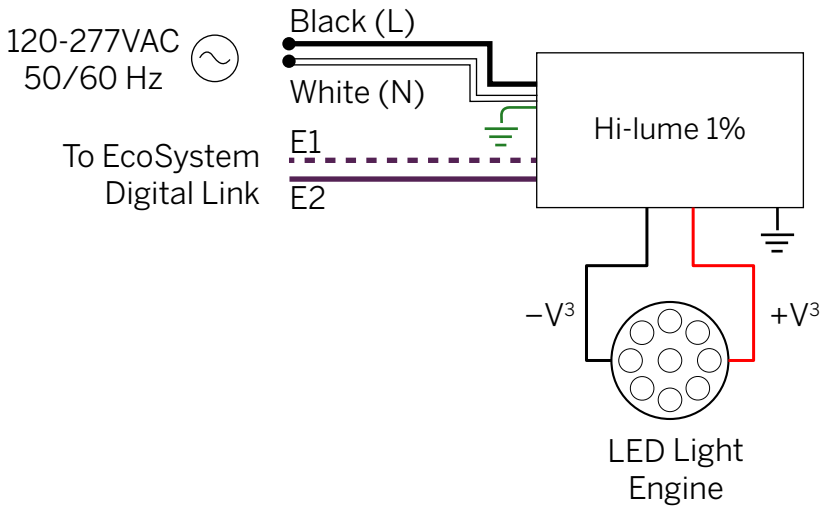

For:
Static White
Static White High Output

UNV96-WL = 0-10V/Phase Dim 96W Wet Location, 1% dimming (120-277V)

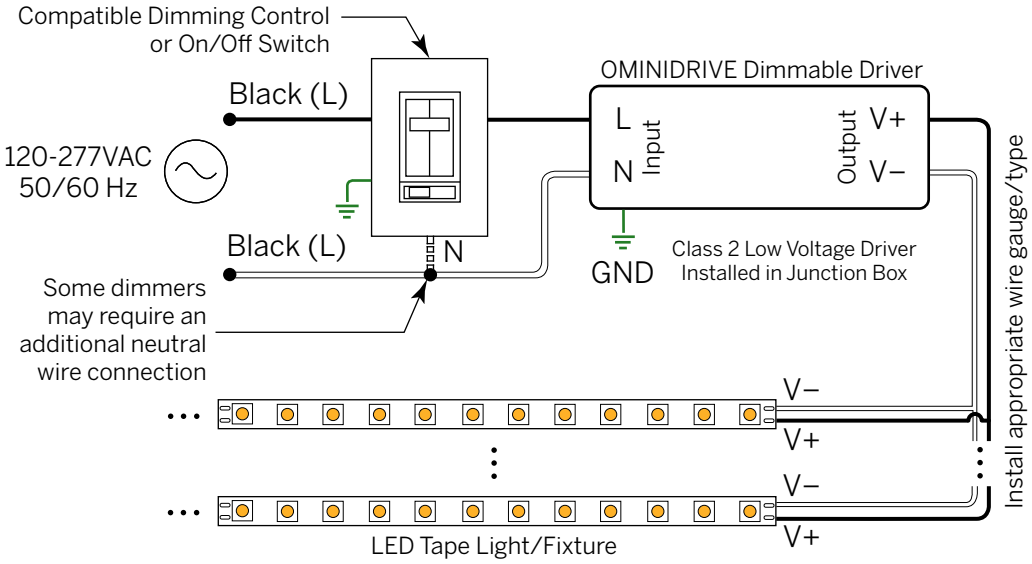

For:
Static White
Static White High Output

Step 6 - ***Wire Luminaire*** *(continued)*

UNV384-WL = 0-10V/Phase Dim 384W Wet Location, 1% dimming (120-277V)

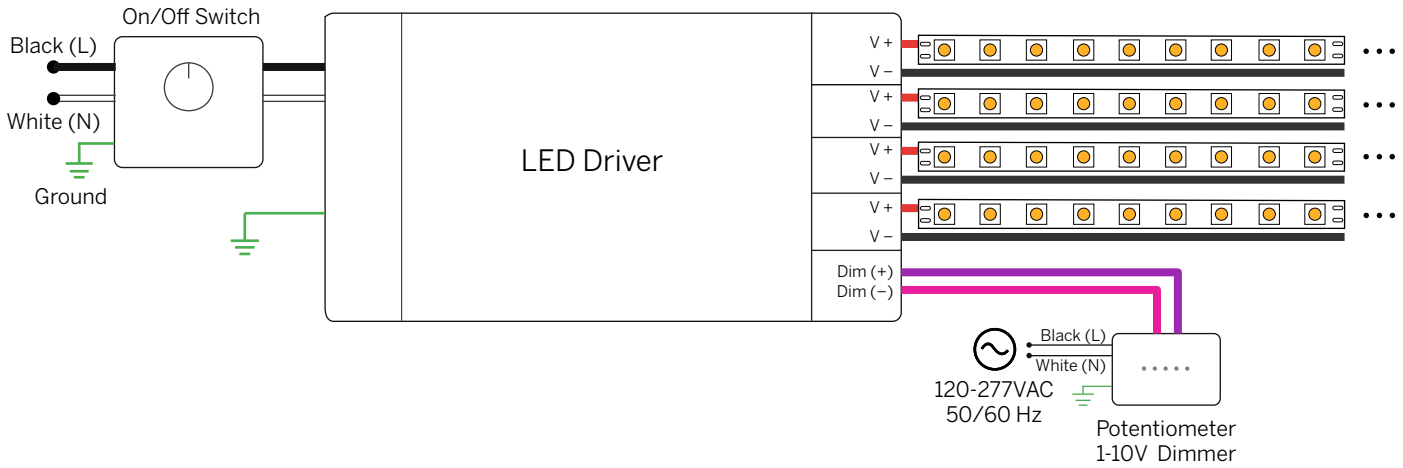

For:
Static White
Static White High Output

DALI-DT6 = eldoLED DALI-2 (DT6), 0.1% dimming (120-277V)

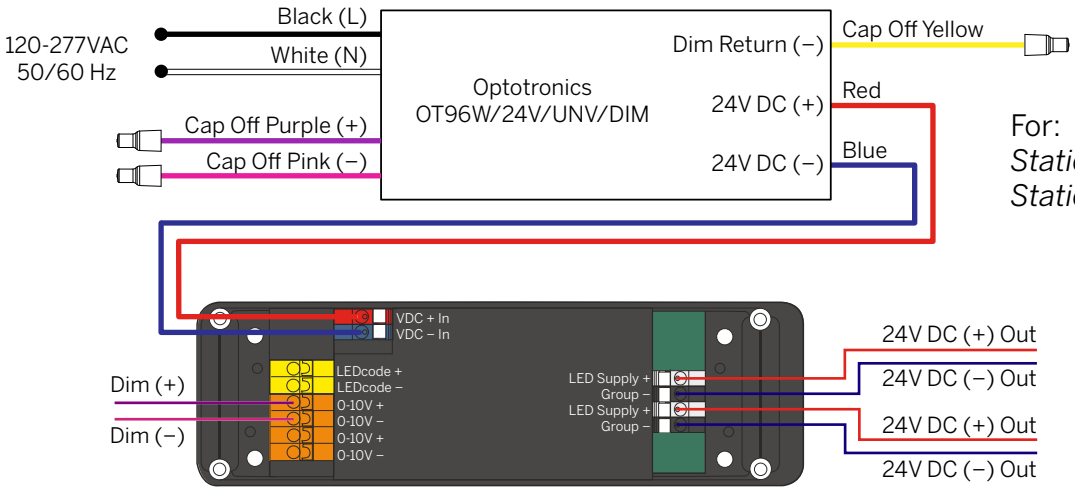

For:
Static White
Static White High Output

LINEARdrive 211D
2 LED Groups
1 Control Channel