3" ProTools+ Adjustable
Round Recessed (Warm Dim)

inter•lux

Recessed Plaster Trim (RPT)

Recessed Bezel Trim (RBT)

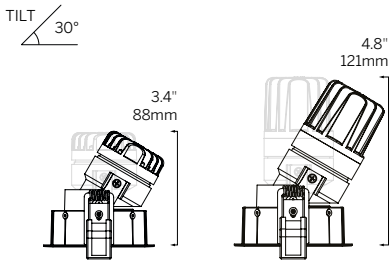

Low / Mid Power High Power

Ordering Information

WG-80RPTA			92			RAC						
Model	**Fixation**	**Power**[1]	**CRI**	**CCT**[2]	**Driver**[3]	**Cover**	**Lens**	**Beam**	**Trim Finish**	**Cover Finish**	**Housing**[4]	**Options**
WG-80RPTA	RPT RBT	L M H	92	WD2718 WD3018	S010 D010 SPH D2S RS010 RD010 RD2S X	RAC	OA SOL LSL HL	15º 25º 35º 50º	W B S	MW MB SC BC	LP NC IC CP X	EM AWNRF

Luminaire
- Part of a complete family of 3" aperture high output downlights.
- 3" round aperture recessed adjustable downlight.
- Bridgelux LEDs.
- CRI 92+ standard.
- L70 (TM21 Projected 85ºC) Warm Dim 50,000 hours.
- ETL and ETL-C for dry and damp locations.
- RPT and RBT installed and maintained from below ceiling. Maximum ceiling thickness 1".
- Housings available (see housings page).
- 5-year warranty.

Fixation
- RPT = Recessed Plaster Trim
- RBT = Recessed Bezel Trim

Power[1]
- L = Low Power, 6.0W @ 350mA
- M = Mid Power, 9.0W @ 250mA
- H = High Power, 12.0W @ 350mA

CRI
- 92 = 92 CRI

CCT[2]
- WD2718 = Warm Dim 2700K - 1800K
- WD3018 = Warm Dim 3000K - 1800K

Integral Driver[3]
- S010 = eldoLED 0-10V 1% dimming, 120-277V (22W)
- D010 = eldoLED 0-10V 0.1% dimming, 120-277V (22W)
- SPH = Phase (2-wire) 3% dimming, 120V only (20W) (N/A for M power)
- D2S = DALI-2 for Static White 0.1% dimming, 120-277V (22W)

Remote Driver[3]
- RS010 = Remote eldoLED 0-10V 1% dimming, 120-277V (22W, 50W or 100W)
- RD010 = Remote eldoLED 0-10V 0.1% dimming, 120-277V (22W, 50W or 100W)
- RD2S = Remote DALI-2 for Static White 0.1% dimming, 120-277V (22W, 50W or 100W)
- X = No driver

Cover
- RAC = Round Asymmetric Cone

Lens (1 accessory/lens per fixture)
- OA = Open Aperture
- SOL = Solite Lens
- LSL = Linear Spread Lens
- HL = Honeycomb Louver

Beam
- 15 = 15° Beam Angle (20º M / H)
- 25 = 25° Beam Angle
- 35 = 35° Beam Angle (40º M / H)
- 50 = 50° Beam Angle

Trim Finish
- W = White, RAL 9003 (standard)
- B = Black, RAL 9017
- S = Silver, RAL 9006

Cover Finish
- MW = Matte White (standard)
- MB = Matte Black
- SC = Silver Chrome
- BC = Black Chrome

Housing (Optional)[4]
- LP = Landing Pan
- NC = New Construction Housing
- IC = Insulated Ceiling Housing
- CP = Chicago Plenum Housing
- X = No Housing

Options
- EM = Emergency (remote only)
- AWNRF = Lutron Athena Wireless Node RF (RS010, RD010, RD2S drivers only)

1. Wattage shown does not include power supplies/drivers.
2. See photometric data sheet for delivered lumens.
3. See driver information for details.
4. See housings pages for details.

CUTOUT
Ø3.1" / 80mm

3" ProTools+ Adjustable
Round Recessed (Warm Dim)

inter•lux

Recessed Plaster Trim (RPT)

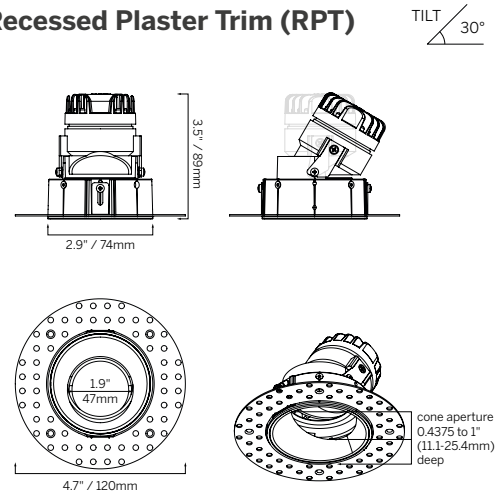

Low /Mid Power

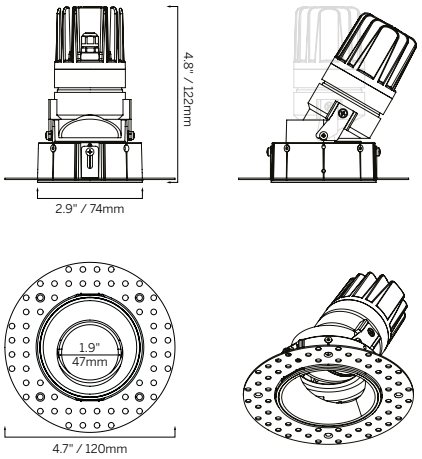

High Power

Recessed Bezel Trim (RBT)

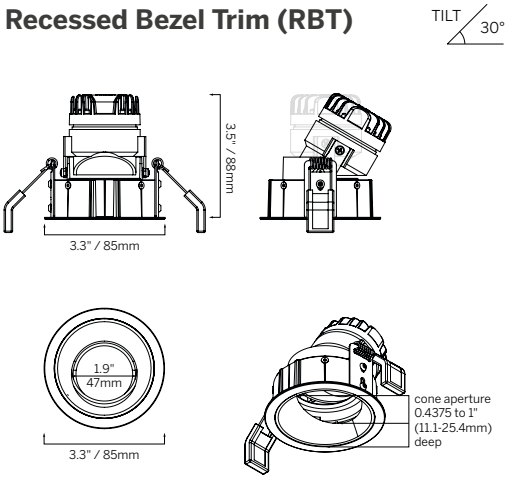

Low /Mid Power

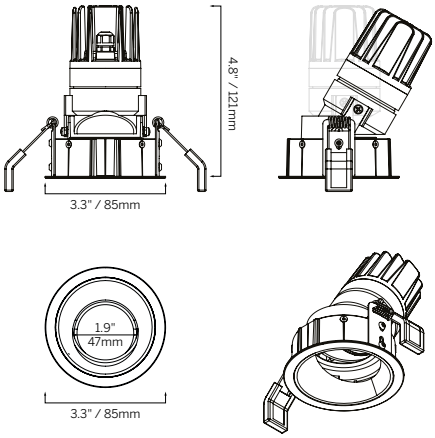

High Power