3" ProTools+ Adjustable
Round Recessed (Tunable White)

inter•lux

Recessed wPlaster Trim (RPT)

Recessed Bezel Trim (RBT)

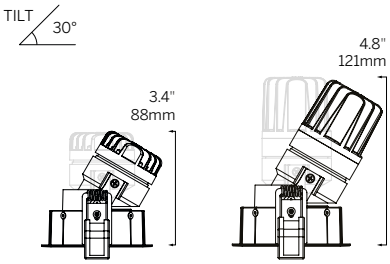

Low / Mid Power High Power

Ordering Information

WG-80RPTA			92			RAC						
Model	**Fixation**	**Power**[1]	**CRI**	**CCT**[2]	**Driver**[3]	**Cover**	**Lens**	**Beam**	**Trim Finish**	**Cover Finish**	**Housing**[4]	**Options**
WG-80RPTA	RPT RBT	L M H	92	TW1840 TW2765	RD2T X	RAC	OA SOL LSL HL	20º 25º 40º 50º	W B S	MW MB SC BC	LP NC IC CP X	EM AWNRF

Luminaire
- Part of a complete family of 3" aperture high output downlights.
- 3" round aperture recessed adjustable downlight.
- Bridgelux LEDs.
- CRI 92+ standard.
- L70 (TM21 Projected 85ºC) Tunable White 50,000 hours.
- ETL and ETL-C for dry and damp locations.
- Luminaire installed and maintained from below the ceiling. Maximum ceiling thickness 1".
- Housings available (see housings page)

Fixation
- RPT = Recessed Plaster Trim
- RBT = Recessed Bezel Trim

Power[1]
- L = Low Power, 6.0W @ 350mA
- M = Mid Power, 9.0W @ 250mA
- H = High Power, 12.0W @ 350mA

CRI
- 92 = 92 CRI

CCT[2]
- TW1840 = Tunable White 1800K - 4000K
- TW2765 = Tunable White 2700K - 6500K

Remote Driver[3]
- RD2T = Remote DALI-2 (DT8) for Tunable White 0.1% dimming, 120-277V (30W)
- X = No driver

Cover
- RAC = Round Asymmetric Cone

Lens (1 accessory/lens per fixture)
- OA = Open Aperture
- SOL = Solite Lens
- LSL = Linear Spread Lens
- HL = Honeycomb Louver

Beam
- 20 = 20° Beam Angle
- 25 = 25° Beam Angle
- 40 = 40° Beam Angle
- 50 = 50° Beam Angle

Trim Finish
- W = White, RAL 9003 (standard)
- B = Black, RAL 9017
- S = Silver, RAL 9006

Cover Finish
- MW = Matte White (standard)
- MB = Matte Black
- SC = Silver Chrome
- BC = Black Chrome

Housing (Optional)[4]
- LP = Landing Pan
- NC = New Construction Housing
- IC = Insulated Ceiling Housing
- CP = Chicago Plenum Housing
- X = No Housing

Options
- EM = Emergency (remote only)
- AWNRF = Lutron Athena Wireless Node RF (RD2T drivers only)

1. Wattage shown does not include power supplies/drivers.
2. See photometric data sheet for delivered lumens.
3. See driver information for details.
4. See housings pages for details.

CUTOUT
Ø3.1"/ 80mm

3" ProTools+ Adjustable
Round Recessed (Tunable White)

inter•lux

Recessed Plaster Trim (RPT)

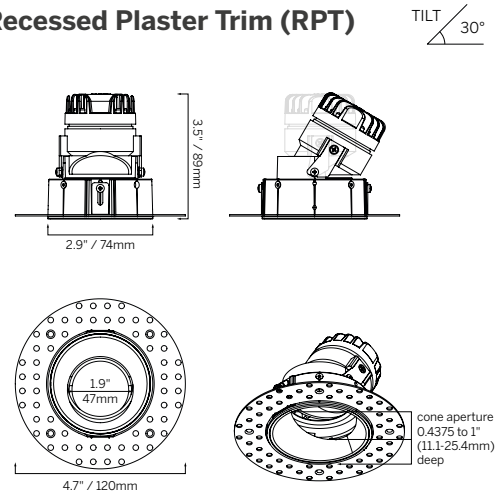

Low /Mid Power

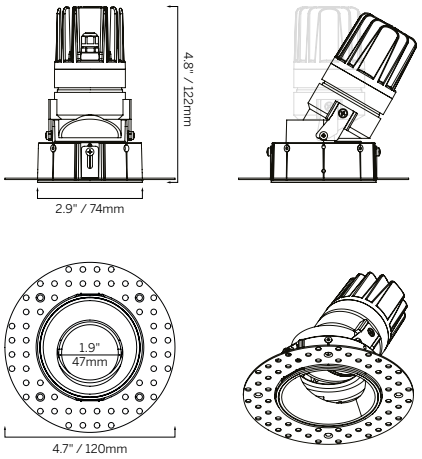

High Power

Recessed Bezel Trim (RBT)

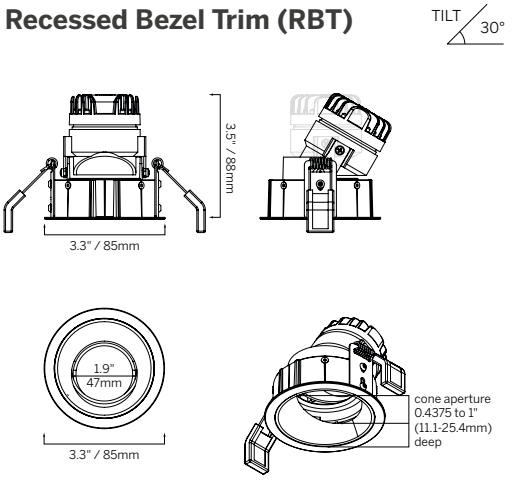

Low /Mid Power

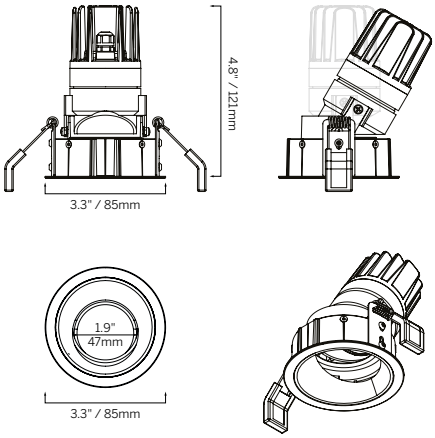

High Power