20 Linear

WG-20LDI-FR-S-R
WG-20LD-FR-S-R
WG-20LI-FR-S-R

Installation Instructions

Suspended

Frame Rectangle
Direct/Indirect, Direct, or Indirect
24 x 48, 24 x 72, 24 x 96, 48 x 96

Luminaires must be installed by a qualified electrician (check with local and national codes for proper installation).

To prevent electrical shock, disconnect electrical supply before installation or servicing.
Never connect a live fixture!!!

Contractor is responsible for adequately reinforcing walls and/or ceilings to support fixture weight. Provide blocking when necessary.

Step 1 - ***Open the Box***

Unpack luminaire units. Remote drivers and housings are supplied by Inter-lux. A second cable may be powered or unpowered depending on configuration. Fixture may also be be powered by one or two drivers.

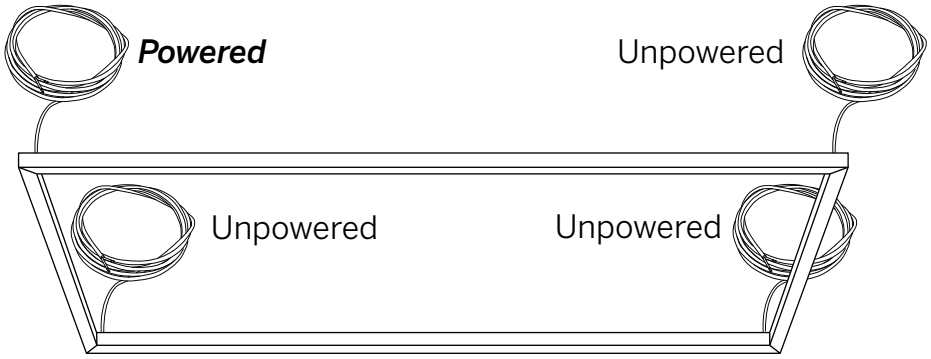

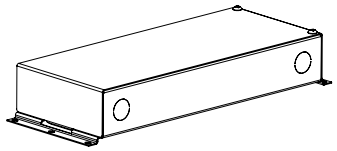

Remote Housing
with Driver*
(not to scale,
generic box shown)

24 x 48
Shown

Single Circuit Fixture
Direct and Indirect lighting
powered off of same Driver

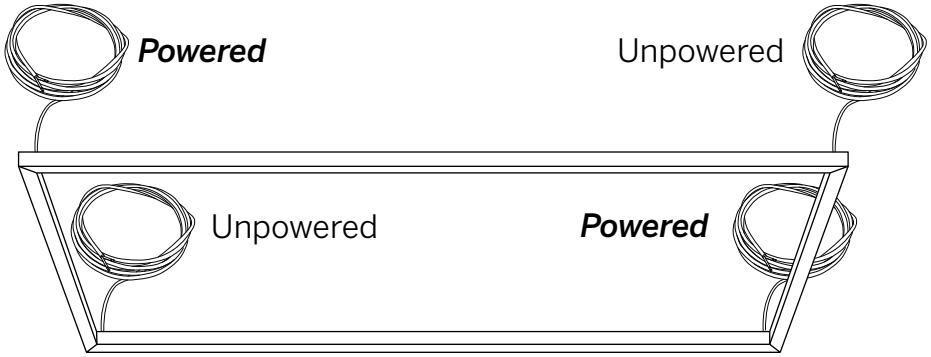

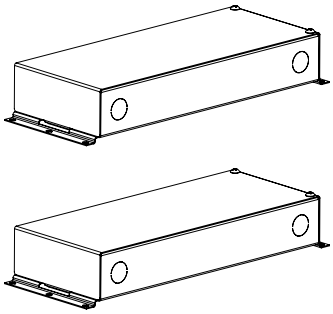

Remote Housings
with Drivers*
(not to scale,
generic box shown)

24 x 48
Shown

Dual Circuit Fixture
Direct and Indirect lighting
powered off of (2) Drivers.
Direct and Indirect lighting
may be operated and
controled separately.

Need Help?

*See Wiring and Driver Pages for actual Remote Driver and Housing Pairings

Variant Light Patterns

Illustration of light output shows direction only, and is not indicative of actual color, intensity, or spread.

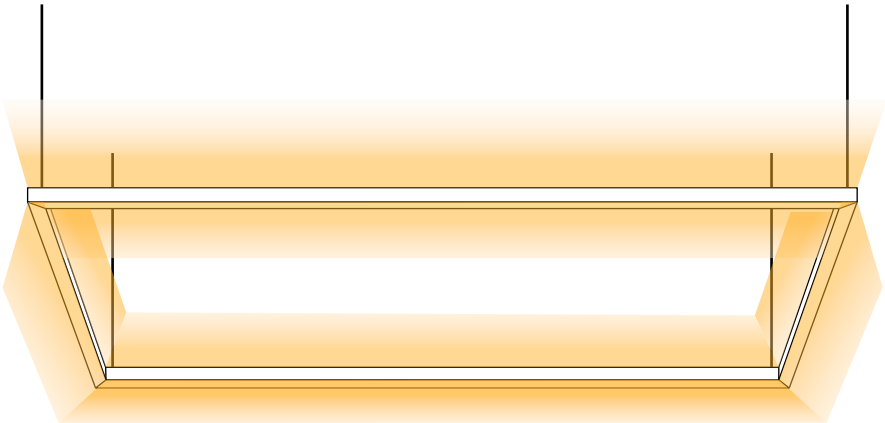

20LDI
Direct/Indirect

20LD
Direct

20LI
Indirect

Need Help?

Step 2 - ***Prep Ceiling***

- **a** Measure distance between centers of suspensions points
- **b** Mark ceiling for center of Power Feed/Suspension Cables

Step 3 - ***Hang & Wire***

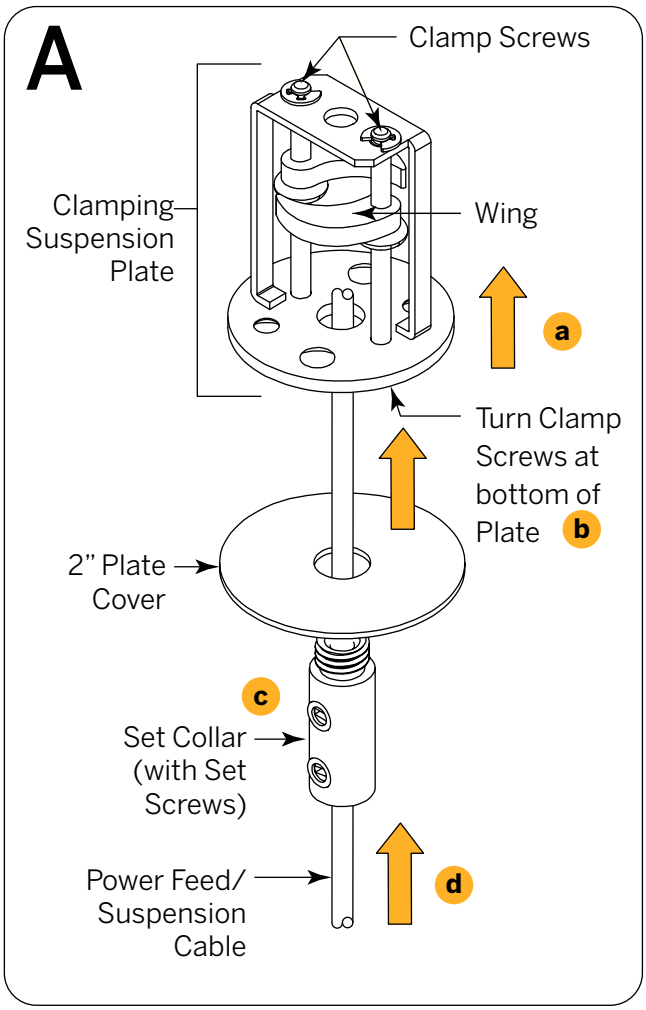

[1]Independent operation of Direct and Indirect light requires (2) Drivers.

[2]Set Screws require a small slotted screwdriver.

A. For Drywall or Acoustic Tile

- **a** At each mark, drill a 1-1/8" hole in ceiling. Insert Clamping Suspension Plate into hole.
- **b** Swing out Wings and tighten Clamp Screws at bottom of Plate with Phillips screwdriver. Doing so will lower Wings and clamp them against top surface of ceiling.
- **c** Loosen Set Screws on Set Collar. Place Plate Cover on bottom of Clamping Suspension Plate and follow with Set Collar. Screw Set Collar into bottom of Plate.
- **d** Insert Power Feed /Suspension Cable through Plate assembly. Connect Cable to low voltage wires from Remote Driver.[1] Tighten Set Screws to secure.
- **e** Adjust height as needed. Lock by tightening Set Screws.[2]
- **f** *Single Circuit:* Repeat steps **a** to **c** and **e** for each of the Unpowered Suspension cables.

  Dual Circuit: Repeat steps **a** to **e** for the second Powered Suspension cable, then step **f** for each of the Unpowered Suspension cables.
- **g** Level Fixture via the Set Screws in Set Collar.
- **h** Energize!

Need Help?

Step 3 - ***Hang & Wire*** *(continued)*

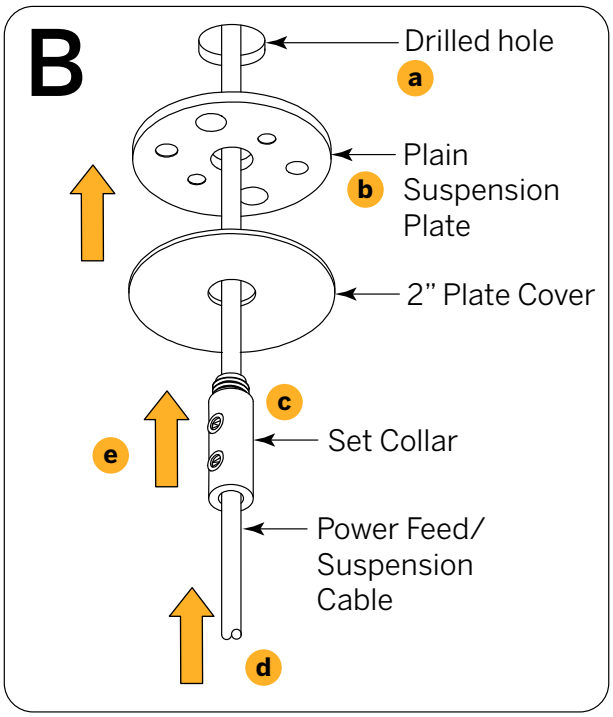

[1]Independent operation of Direct and Indirect light requires (2) Drivers.

[2]Set Screws require a small slotted screwdriver.

B. For Concrete, Wood, or Metal

a At each mark, drill hole in ceiling sized for the Power Feed/Suspension Cable.

b Screw Plain Suspension Plate to ceiling with drilled hole centered in Plate's center hole. (Screws supplied by others.)

c Loosen Set Screws on Set Collar. Place Plate Cover on bottom of Clamping Suspension Plate and follow with Set Collar. Screw Set Collar into bottom of Plate.

d Insert Power Feed /Suspension Cable through Plate assembly. Connect Cable to low voltage leads from Remote Driver.[1]

e Adjust height as needed. Lock by tightening Set Screws.[2]

f *Single Circuit:* Repeat steps **a** to **c** and **e** for each of the Unpowered Suspension cables.

Dual Circuit: Repeat steps **a** to **e** for the second Powered Suspension cable, then step **f** for each of the Unpowered Suspension cables.

g Level Fixture via the Set Screws in Set Collar.

h Energize!

This space intentionally left blank.

Need Help?

Step 3 - ***Hang & Wire*** *(continued)*

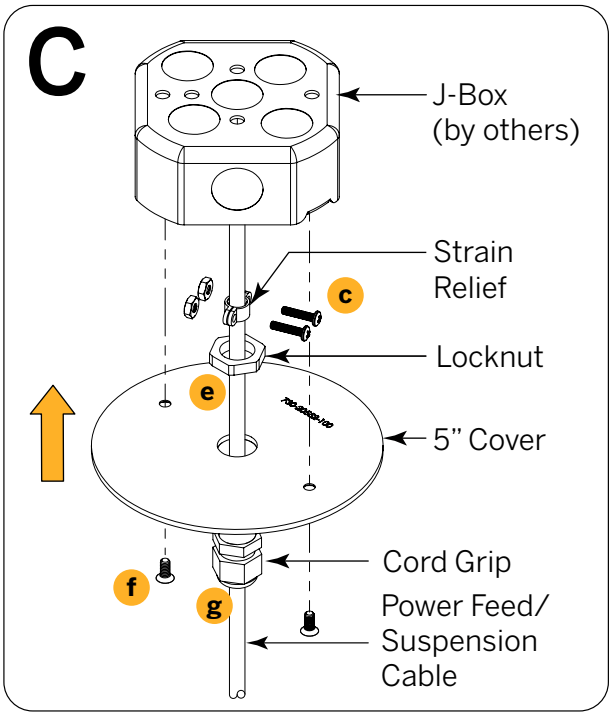

*Independent operation of Direct and Indirect light requires (2) Drivers.

C. For New Construction/Open Ceiling

- **a** At each mark, center and cut ceiling for Junction Box (by others)
- **b** Pull incoming low voltage leads from Remote Driver into Junction box.
- **c** Assemble Strain Relief with supplied Screws and Nuts. String Cord Grip, 5" Cover, Locknut, and assembled Strain Relief onto Power Feed/Suspension Cable.
- **d** Connect Power Feed/Suspension Cable to incoming low voltage leads from Remote Driver.*
- **e** Tighten Strain Relief. Fasten Cord Grip to Locknut.
- **f** Cover J-Box with 5" Cover. Fasten Cover to J-Box with screws (by others).
- **g** *Single Circuit:* Repeat steps **a** to **c** and **e** & **f** for each of the Unpowered Suspension cables.

  Dual Circuit: Repeat steps **a** to **f** for the second Powered Suspension cable, then step **g** for each of the Unpowered Suspension cables.
- **h** Level Fixture by adjusting nut of Cord Grip.
- **i** Energize!

Need Help?

20 Linear

WG-20LDI-FR-S-R
WG-20LD-FR-S-R
WG-20LI-FR-S-R

Suspended

Frame Rectangle
Direct/Indirect, Direct, or Indirect
24 x 48, 24 x 72, 24 x 96, 48 x 96

Frame Rectangle Sizes

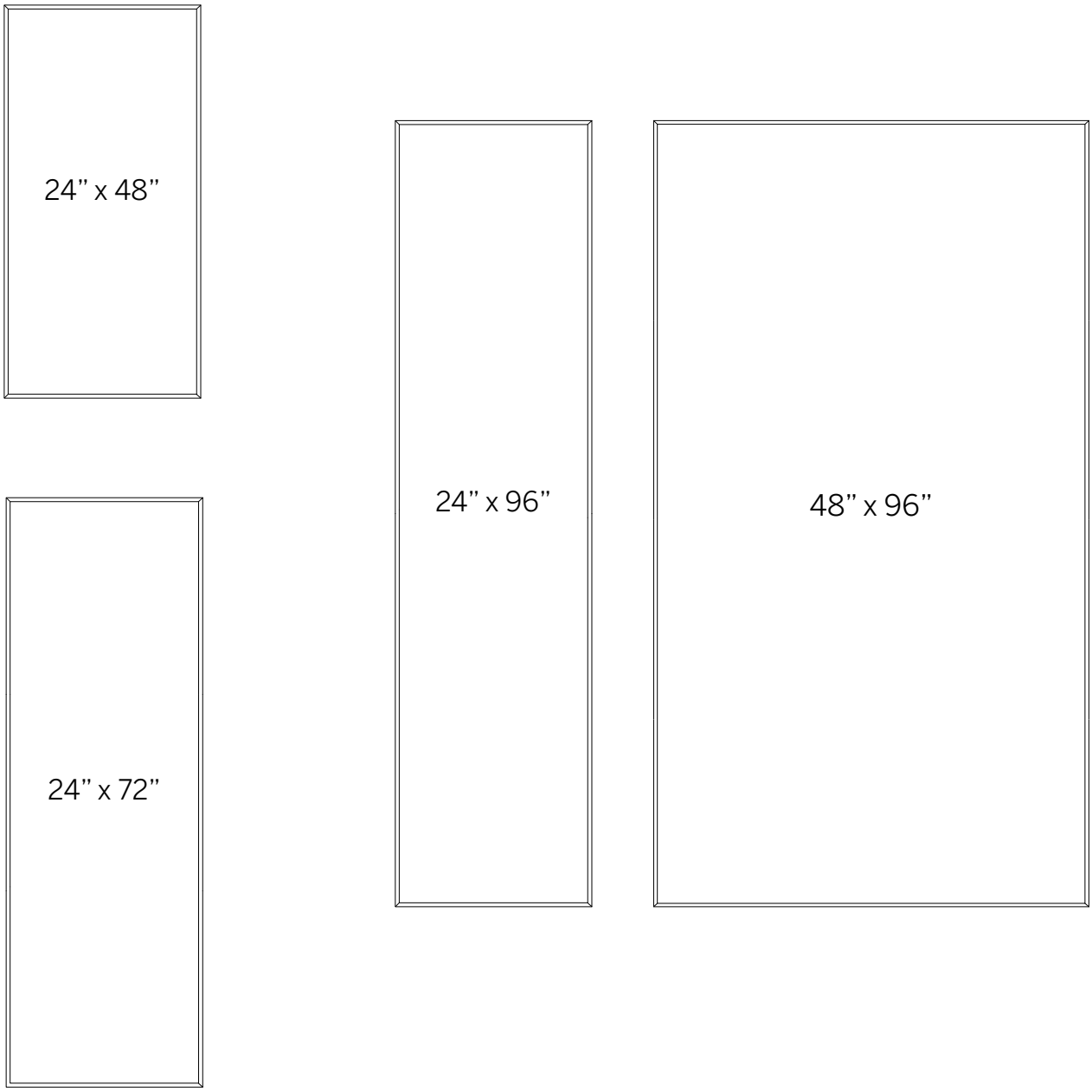

Need Help?