ProTools Linear

WG-60PTL-RPT
WG-60PTLWW-RPT

Plaster Trim Linear Installation Instructions

Luminaires must be installed by a qualified electrician (check with local and national codes for proper installation).

To prevent electrical shock, disconnect electrical supply before installation or servicing.

Never connect a live fixture!!!

Contractor is responsible for adequately reinforcing walls and/or ceilings to support fixture weight. Provide blocking when necessary.

Individual / Starter Housing

NOTE
Ceiling Width Cutout is 3"
Length is fixture length + 1/2"
Ex:96" fixture = 96 1/2" cutout length

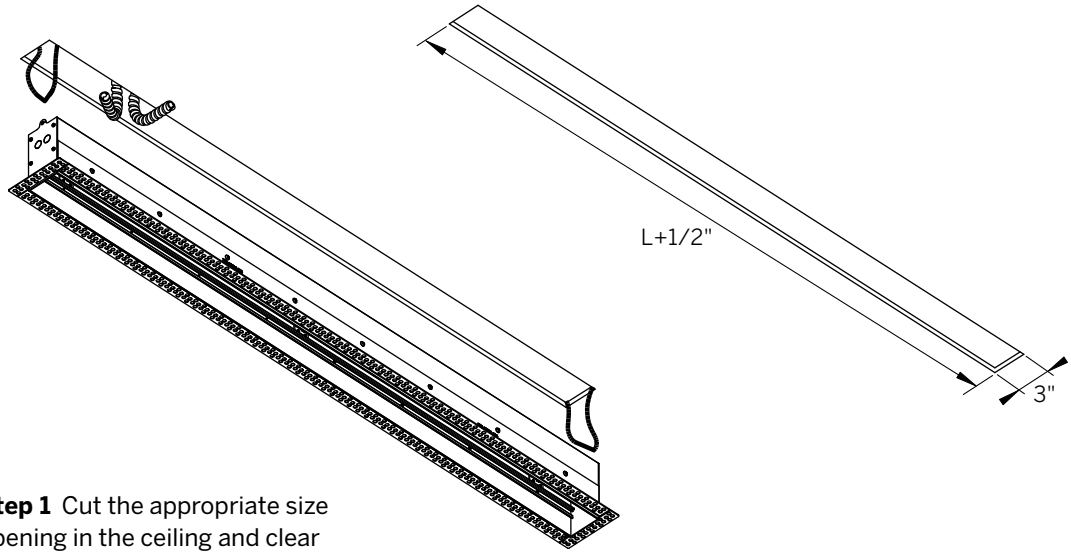

Step 1 Cut the appropriate size opening in the ceiling and clear any insulation at least 3" from any part of the fixture. Pull support wire (by others) through the cutout.

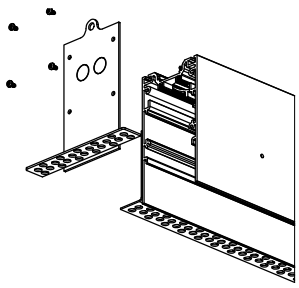

Step 2 Attach the End Caps and tighten Set Screws ensuring there is no gap.

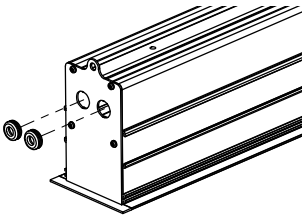

Note: For Chicago Plenum, knock out only 2 holes and install provided grommets.

Step 3 Pull 3/8"conduit through the ceiling cutout and connect it to the End Cap or top of Fixture Feed location (TF).

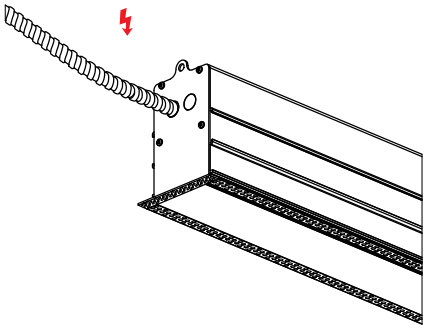

Standard End Feed

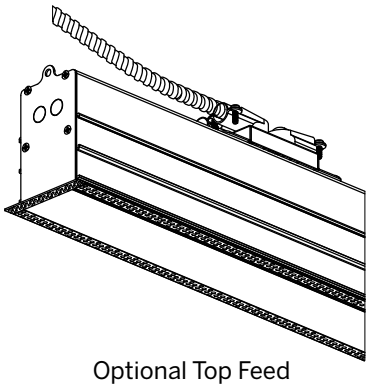

Optional Top Feed

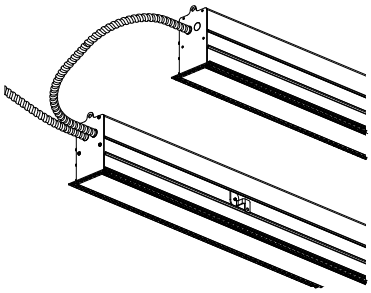

Through-wiring

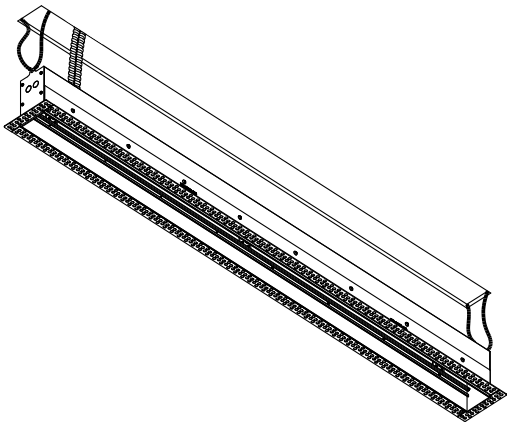

Step 4 After connecting 3/8" conduit and support wire insert Housing into opening.

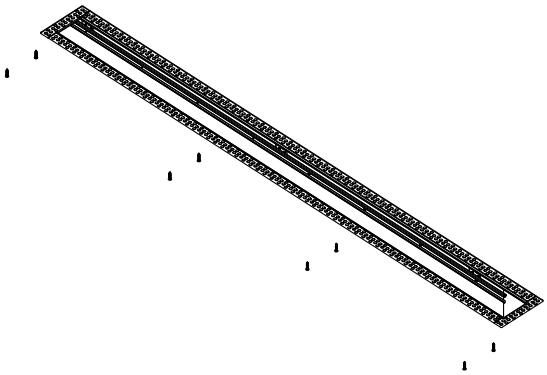

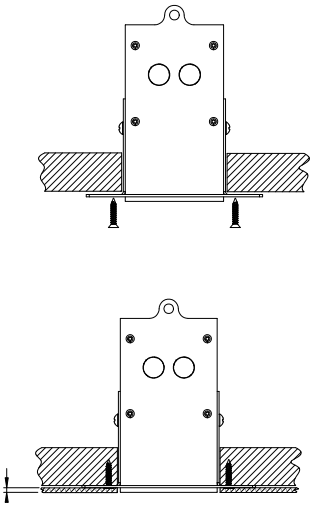

Step 5 Screw Housing into ceiling. Provide adequate blocking above the ceiling as required.

Continuous Run Housing (see steps 1-6 for starter)

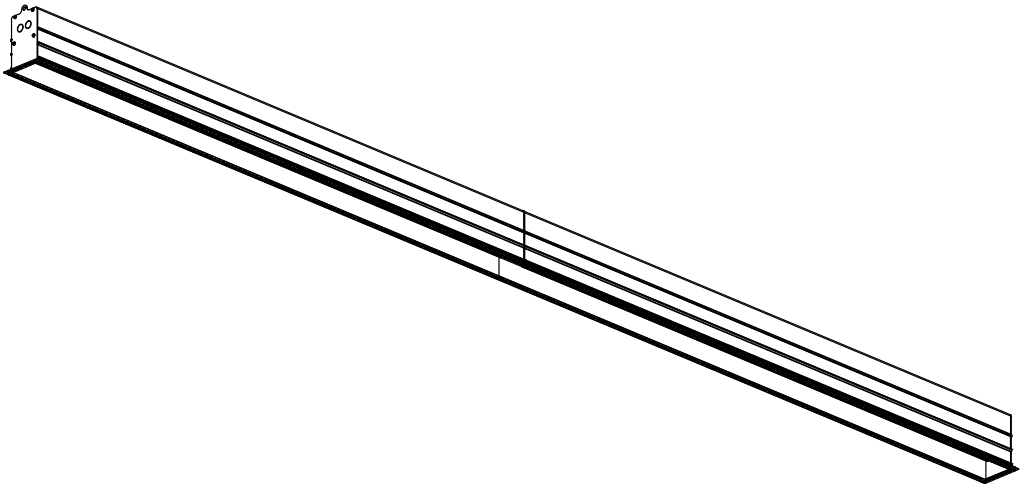

Step 6 Install Joiners (2) onto one Housing ONLY, tighten with Set Screws.

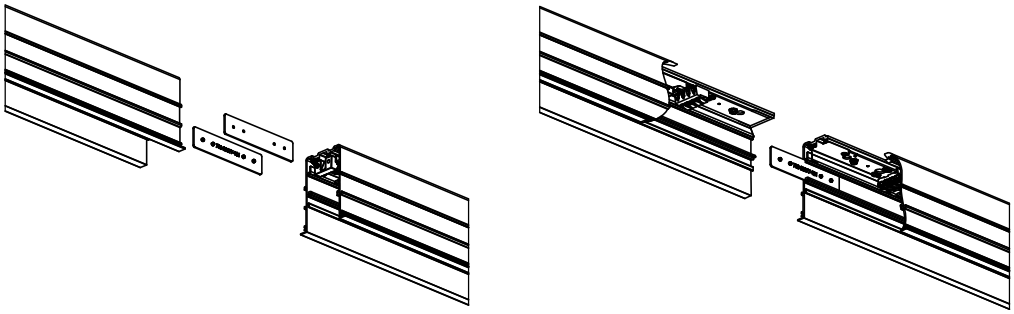

Step 7 Slide joining Housing onto Joiners and tighten Set Screws.

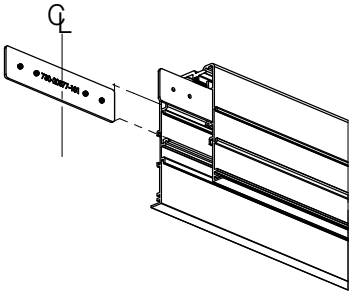

Connect Wiring (with power off)

Step 8 Connect the feed cable to the black (L), white (N) and green (Gnd) terminals. Connect the dimming conductors, if applicable.

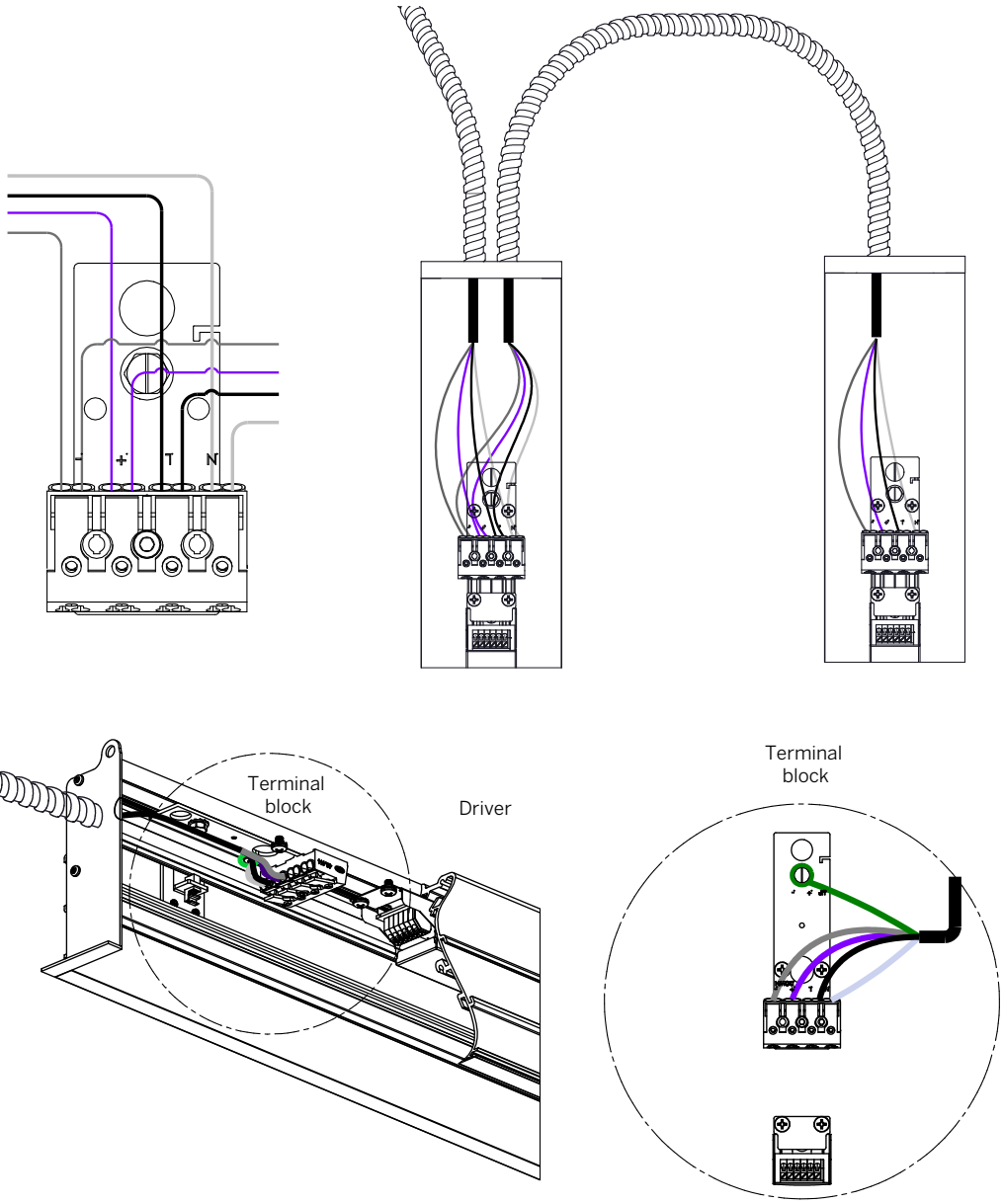

For continuous run connect wires to terminals as shown.

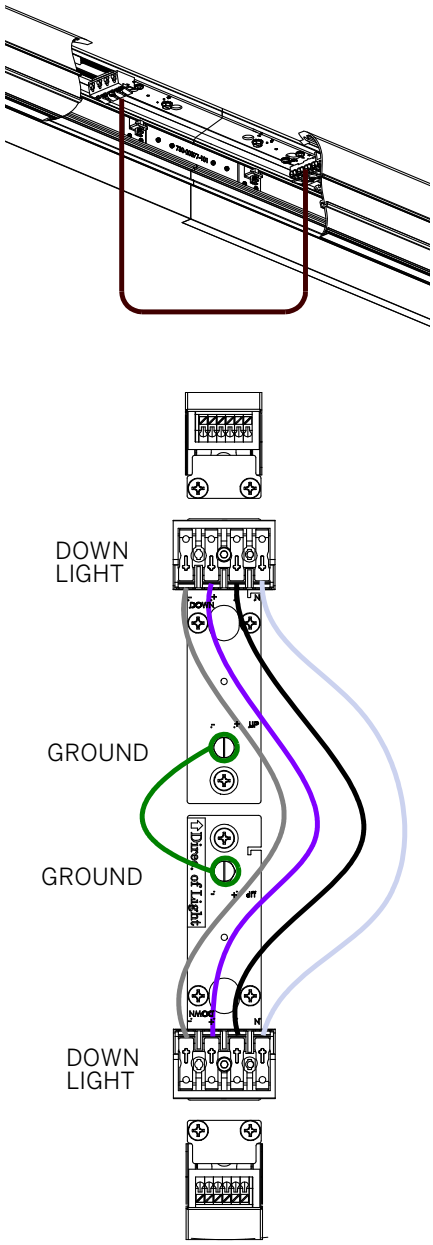

Install LED Tray

Step 9 Connect low voltage wires from the Gear Tray to the Driver Secondary.

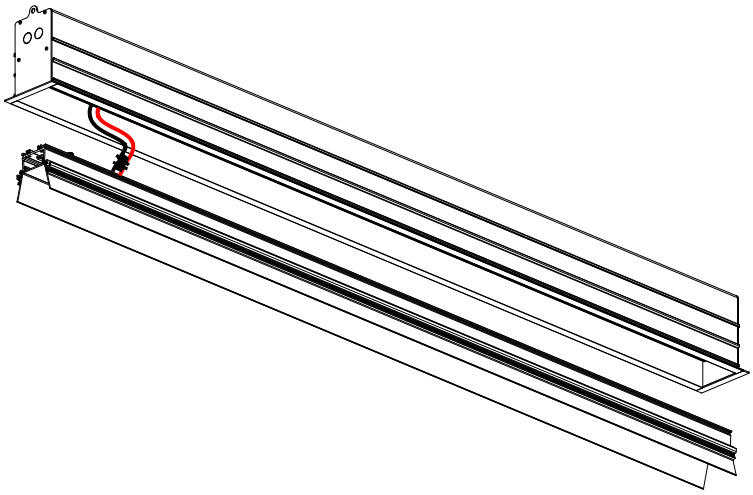

Step 10 Insert GearTray and ensure it snaps in correctly and is secure.

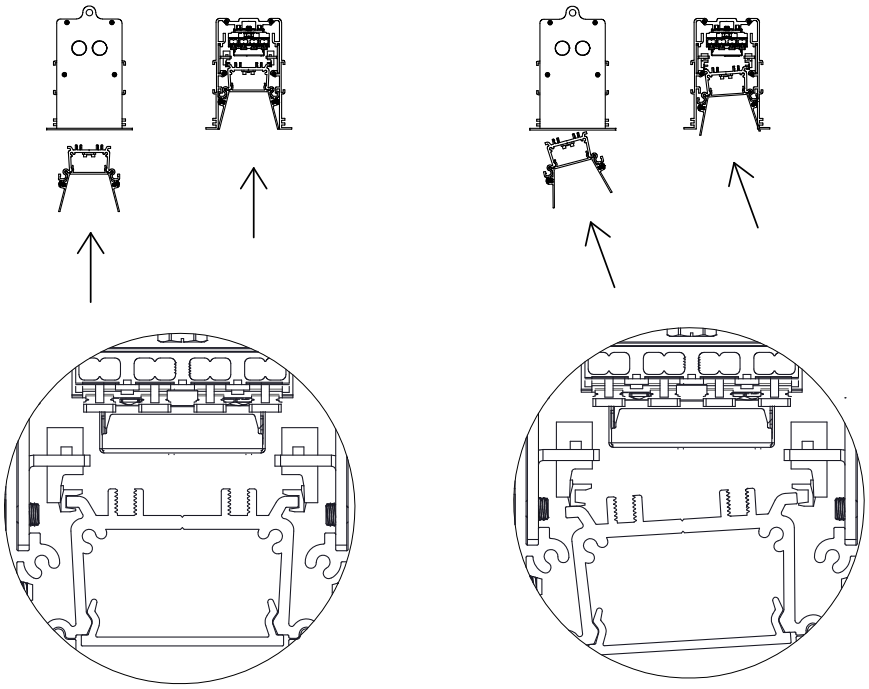

CORRECT

WRONG
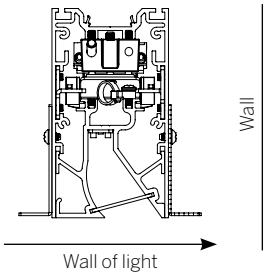
Note direction for Wall Wash Optics