4" ProTools DLX Downlight
Round Asymmetric Cover

inter•lux

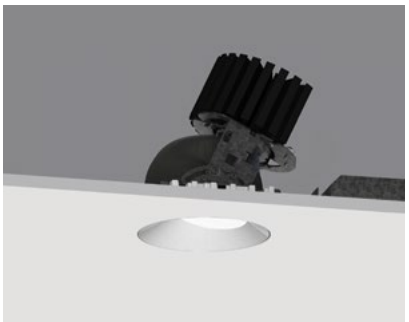

Recessed Plaster Trim

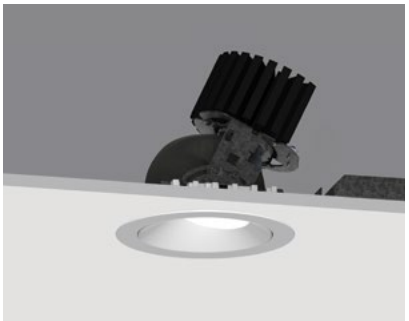

Recessed Bezel Trim

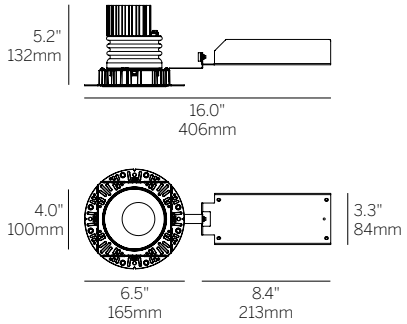

Cut Out: Ø 4.75" / 121mm

Recessed Plaster Trim (RPT)

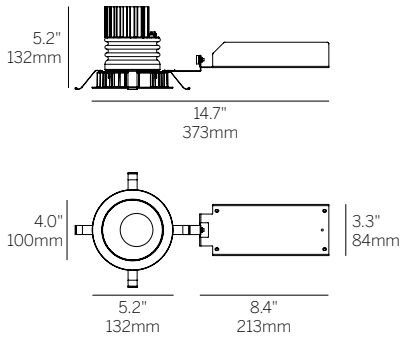

Cut Out: Ø 4.75" / 121mm

Recessed Bezel Trim (RBT)

Ordering Information

Model	Fixation	Power[1,2]	CRI/ CCT[3]	Driver[4]	Cover	Lens	Beam	Finish	Options[6]
WG-100RPTDLX					RAC				
WG-100RPTDLX	RPT RBT	L M H XH	927 930 935 940	X S D010 PEQ1 PEQ0 DFPN	RAC	OA RSL RSC RSO	16 32 41	W G[5]	LP CP IC WL

Luminaire
- 4" round adjustable downlight with 2" light aperture.
- Regressed aperture / lens position.
- No light leak or view into ceiling void from below due to a unique light leak hood.
- Luminaire and driver installed and maintained from below the ceiling.
- Minimum of 5.5" (127mm) ceiling void is required to install the fixture from below the ceiling (integral driver).
- Modular interchangeability throughout the entire ProTools range of products.
- Tilt 45º, Rotation 365º.

Fixation
- RPT = Recessed Plaster Trim
- RBT = Recessed Bezel Trim

Power[1,2]
- L = Low Power, 5.7W @ 350mA
- M = Mid Power, 8.4W @ 500mA
- H = High Power, 12.0W @ 700mA
- XH = Extra High Power, 17.8W @ 1050mA

CRI/CCT[3]
90+ CRI (Low/Medium/High/Extra High)
- 927 = 2700K, (720/999/1344/1884 lm)
- 930 = 3000K, (775/1075/1447/2027 lm)
- 935 = 3500K, (775/1075/1447/2027 lm)
- 940 = 4000K, (830/1151/1549/2171 lm)

Driver[4]
- X = Remote driver, ordered separately
- S = Standard non-dim driver, 120-277V
- D010 = EldoLED, 1%, 0-10V Driver, 120-277V
- PEQ1 = Lutron Hi-lume 1% EcoSystem, 120-277V
- PEQ0 = Lutron Hi-lume Premier 0.1% EcoSystem, 120-277V
- DFPN = Lutron Forward Phase 1% 120VAC

Cover
- RAC = Round Asymmetric Cone

Lens
- OA = Open Aperture
- RSL = Regressed Solite Lens
- RSC = Regressed Satin Clear
- RSO = Regressed Satin Opal

Beam
- 16 = 16° Beam Angle
- 32 = 32° Beam Angle
- 41 = 41° Beam Angle

Finish
- W = White
- G = Gray[5]

Options[6]
ProTools downlights require no additional options kits for remodel & new construction
- LP = Landing Pan
- CP = Chicago Plenum Housing
- IC = IC/NC Housing
- WL = Wet Location

Optical Accessory Holder (Must be ordered separately)
Up to 3 lenses and/or accessories can be added to the Optical Accessory Holder
- ☐ SN = Snoot
- ☐ HX = Hex Louver
- ☐ FG = Frosted Glass
- ☐ LS = Linear Spread Lens
- ☐ SOL = Solite Lens

[1] Other lumen packages available, consult factory.
[2] Wattage shown does not include power supplies/drivers. System wattage adds 10-20%.
[3] See LED data sheet for delivered lumens.
[4] See power supply page for details.
[5] Plaster trim version includes white frame and gray cover.
[6] To specify multiple options, select the appropriate grouped codes from the dropdown e.g. LP-WL.

410 381 1497 inter-lux.com answers@inter-lux.com

Inter-lux reserves the right to make technical changes without notice.

(02.2020)