Data Sheet

CUADRO_3

inter•lux
3741 Commerce Dr. #306-308
Baltimore, MD 21227
Phone (410) 381-1497
inter-lux.com

FINISH	CODE	COLOUR LED	OPTIC
EMBOSSED WHITE	**E91065**	5000K - **C** 4000K - **N** 3500K - **T** 3000K - **W**	15° - **15** 30° - **30** 60° - **60**
NICHEL BRUSHED	**E91064**		

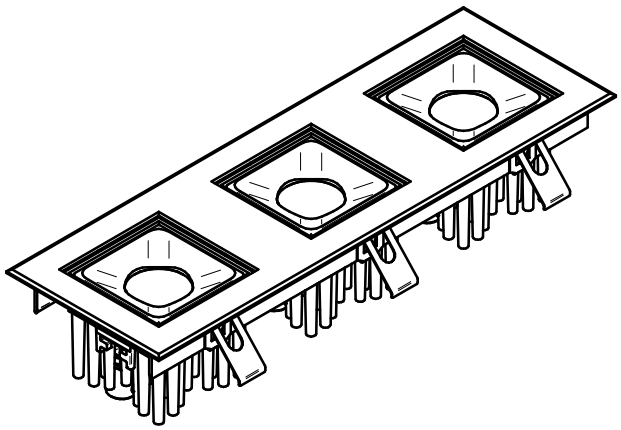

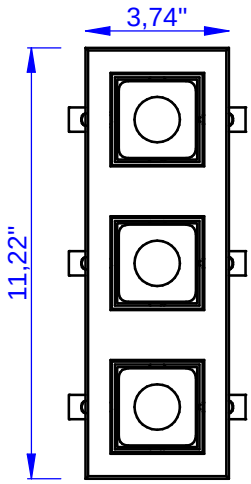

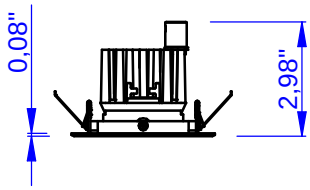

Finishes

EMBOSSED THITE (WH)
NICHEL BRUSHED (NS)

-

Product Descrption

Recessed spotlight with 12 power LED. Extruded aluminum body available in powder coated (white) and brushed nickel. Radiator made of die-cast aluminum, positioned at the rear of the spotlight. Adjustable by + / - 30 ° on the vertical axis and + / - 16 ° in the horizontal axis. Installation with nickel-plated steel springs (included) on plasterboard. Optical group formed by methacrylate lens (15-30-60°) placed in the retracted position to reduce glare. The lens is held in place by a casing made of polycarbonate.Power supply remote.

LED White :
5000K - 4000K - 3500K - 3000K - 2700K

Color LED :
-

Optic :
15°- 30°- 60°

LED RGB :
No

Optic :
-

Applications

Indoor Spotlights

Power Led:
LED XPG2 CREE - CRI80

Resin: No
Cable type included: 11,8" 2X22AWG red/blue cables
Connector type: -
Input (mA) : 500mA
Nominal power (W): 18W
Real power (W): -
Temperature on the surface of the glass: 40°C
Adjustability: Yes
Drive over: No
Glow Wire: 850°
Power supply: Remote
Insulation class: Class 2
IP 20
IK -
Weigh: 1,79 Lbs
Volume: 2,18"³

: OK

: OK

Luminous flux

		Nominal Lumen*					Nominal
Type LED	n°led	5000K - C	4000K - N	3500K - T	3000K - W	2700K - M	Power
XPG2	12	2724	2556	2388	2388	2244	18W

*Value of the luminous flux from the LED data sheet.

CUADRO_3

inter•lux
3741 Commerce Dr. #306-308
Baltimore, MD 21227
Phone (410) 381-1497
inter-lux.com

Installation

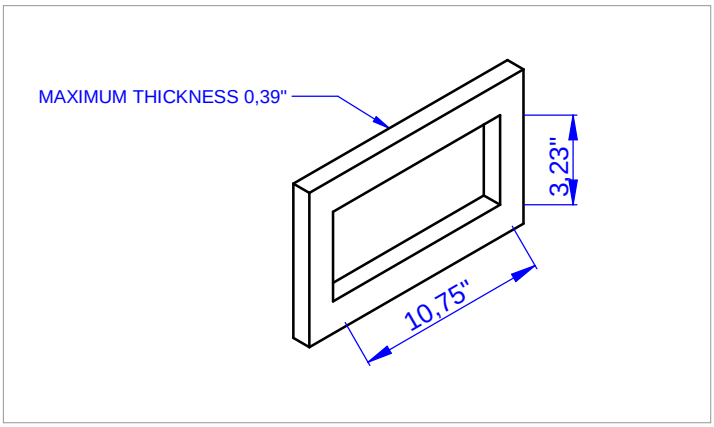

THIS PRODUCT MUST BE INSTALLED IN ACCORDANCE WITH THE APPLICABLE INSTALLATION CODE BY A PERSON FAMILIAR WITH THE CONSTRUCTION AND OPERATION OF THE PRODUCT AND THE HAZARDS INVOLVED

READ ALL OF THESE INSTRUCTIONS BEFORE INSTALLING FIXTURES

· Keep all of the instructions for future reference
· Turn off power before installing fixture
· Installation is to be performed by a qualified electrician only
· All installations must conform to the National Electrical Code as well as all local jurisdictional codes and regulations
· Any modification of the luminaire will void any and all written or implied warranties
· The manufacture accepts no responsibility for damage to persons or property airing through improper use or installation

Accessories

Accessory (1)

Accessory (2)

Accessory (3)

Accessory (1)

Accessory (2)

Accessory (3)

Accessory (4)