Data Sheet

ANTON_RJ 18W

inter•lux
3741 Commerce Dr. #306-308
Baltimore, MD 21227
Phone (410) 381-1497
inter-lux.com

FINISH	CODE	COLOUR LED	OPTIC
EMBOSSED WHITE EMBOSSED BLACK	**E97429** **E97430**	5000K - **C** 4000K - **N** 3000K - **W**	15° - **15** 30° - **30** 60° - **60** Diffused **- 00**

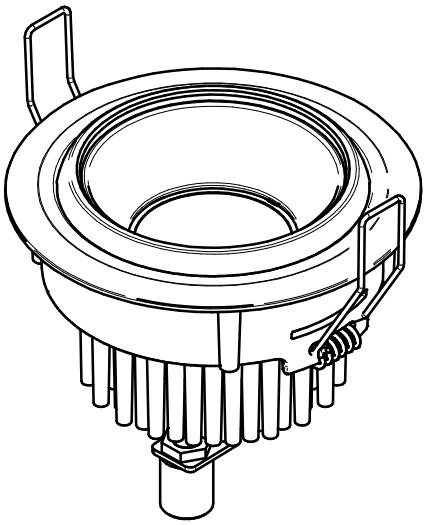

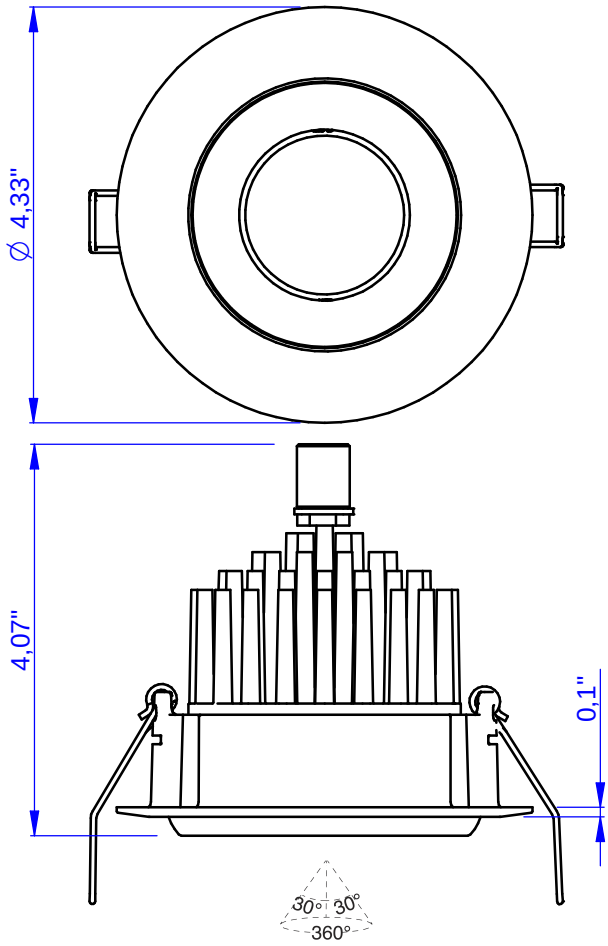

Finishes

WHITE EMBOSSED (WH)
BLACK EMBOSSED (BK)

-

Product Descrption

Recessed tilting round spot with 9 power LED. Aluminum body, available powder coated (white). Article equipped with an aluminum heat sink on the back of the spotlight. Installation on drywall with spring included. Suitable for interior decoration, applicable on walls, ceilings and furniture. Power supply remote.

LED White :
5000K - 4000K - 3000K

Color LED :
-

Optic :
15°-30°-60°-00°

LED RGB :
-

Optic :
-

Applications

Indoor Spotlight

Power Led:
LED XPG2 CREE - CRI80

Resin: No
Cable type included: Yes, 11,8" 2X22AWG red/blue cables
Connector type: -
Input (mA) : 630 mA
Nominal power (W): 18W
Real power (W): Nominal Power
Temperature on the surface of the glass: 40°C
Adjustability: Yes
Drive over: No
Glow Wire: 850°
Power supply: Remote
Insulation class: Class 2
IP 40
IK -
Weigh: 0,88 Lbs
Volume: 128 "³

F : OK

ETL : OK

Luminous flux

		Nominal Lumen*			Nominal
Type LED	n°led	5000K - C	4000K - N	3000K - W	Power
XPG2	9	2394	2241	2097	18W

*Value of the luminous flux from the LED data sheet.

Installation

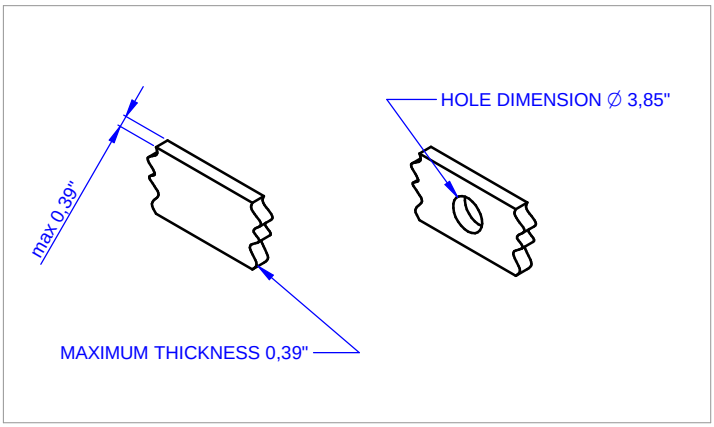

THIS PRODUCT MUST BE INSTALLED IN ACCORDANCE WITH THE APPLICABLE INSTALLATION CODE BY A PERSON FAMILIAR WITH THE CONSTRUCTION AND OPERATION OF THE PRODUCT AND THE HAZARDS INVOLVED

READ ALL OF THESE INSTRUCTIONS BEFORE INSTALLING FIXTURES

- Keep all of the instructions for future reference
- Turn off power before installing fixture
- Installation is to be performed by a qualified electrician only
- All installations must conform to the National Electrical Code as well as all local jurisdictional codes and regulations
- Any modification of the luminaire will void any and all written or implied warranties
- The manufacture accepts no responsibility for damage to persons or property airing through improper use or installation

Accessories

Accessory (1)

Accessory (2)

Accessory (3)

Accessory (1)

Spring included

Accessory (2)

Accessory (3)

Accessory (4)