BIBOK 5MM

Data Sheet

inter•lux
3741 Commerce Dr. #306-308
Baltimore, MD 21227
Phone (410) 381-1497
inter-lux.com

Code	Finish
E91366	WHITE
E85335	CHROME

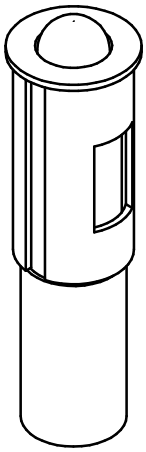

Dimensions

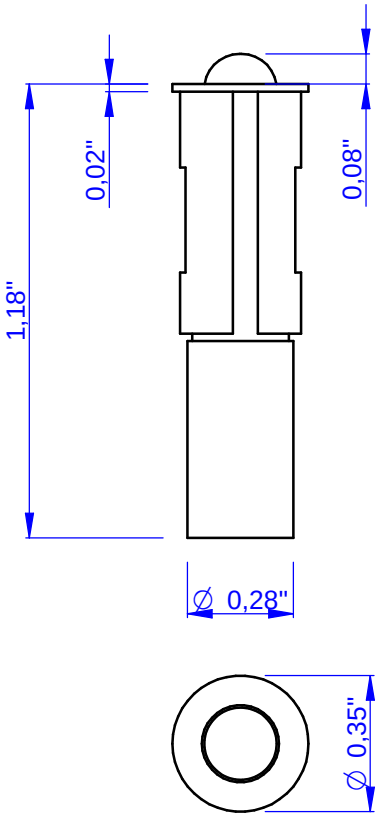

Finishes

White Embossed (WH)
Chrome (CR)

-

Product Descrption

Recessed spotlight with LED 5mm. Nickel plated brass body or powder coated white embossed. Nickel plated steel spring included for installation in plasterboard. Article with resin for guarantee the degree of dust or liquid protection.
Ideal for the creation of "starry skies" and create spectacular effects on walls and ceilings.
Power supply remote.

LED White :
5000K - 3000K

Color LED :
Blue,Amber,Red,Green

Optic :
30°

LED RGB :
-

Optic :
-

Applications

indoor Spotlight

Power Led:

LED Cree 5mm - CRI80

Resin: Yes
Cable type included: Yes, 11,8" 2X22AWG red/blue cables
Connector type: -
Input (V - mA) : 24V - 20mA
Nominal power (W): 0,5W
Real power (W): Nominal Power
Temperature on the surface of the glass: -
Adjustability: No
Drive over: No
Glow Wire: 850°
Power supply: Remote
Insulation class: Class 2
IP 44
IK -
Weigh: 0,022 Lbs
Volume: 6,1"³

: OK

: OK

Luminous flux

		Lumen* LM80		power
Led Type	n°LED	5000K	3000K	watt
5mm	1	4,8	3,2	0,5

*Value of the luminous flux from the LED data sheet.

BIBOK 5MM

inter•lux
3741 Commerce Dr. #306-308
Baltimore, MD 21227
Phone (410) 381-1497
inter-lux.com

Installation

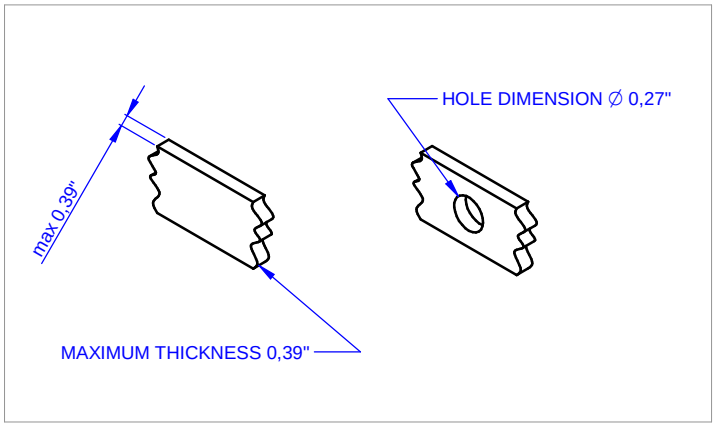

THIS PRODUCT MUST BE INSTALLED IN ACCORDANCE WITH THE APPLICABLE INSTALLATION CODE BY A PERSON FAMILIAR WITH THE CONSTRUCTION AND OPERATION OF THE PRODUCT AND THE HAZARDS INVOLVED

READ ALL OF THESE INSTRUCTIONS BEFORE INSTALLING FIXTURES

· Keep all of the instructions for future reference
· Turn off power before installing fixture
· Installation is to be performed by a qualified electrician only
· All installations must conform to the National Electrical Code as well as all local jurisdictional codes and regulations
· Any modification of the luminaire will void any and all written or implied warranties
· The manufacture accepts no responsibility for damage to persons or property airing through improper use or installation

Accessories

Accessory (1)

Accessory (2)

Accessory (3)

Accessory (1)

Accessory (2)

Accessory (3)

Accessory (4)