inter•lux

Mole

Installation and maintenance instructions

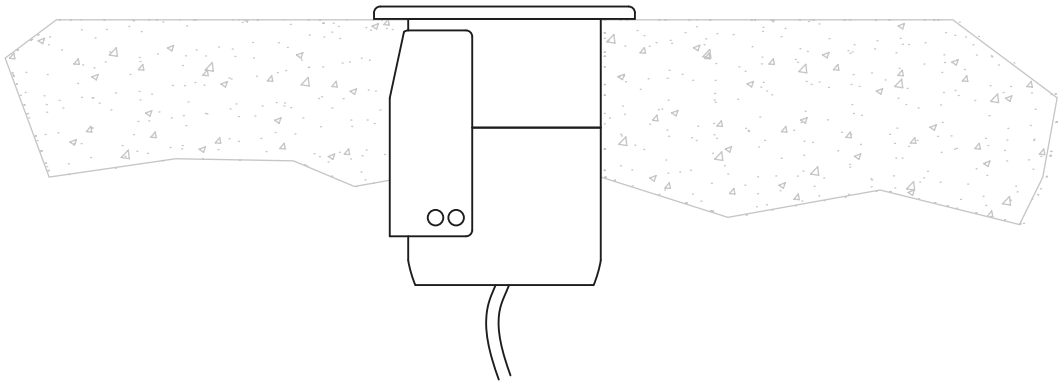

IMPORTANT: All wiring connections must be made before switching on mains power.

MSL Star Oslon Square 2.9V$_F$ 2W @ 700mA

IP66 Dust tight and protected against powerful jets of water.

Please retain these instructions for future reference

This product should not be disposed of in your general waste

Class III - Extra-low voltage

Suitable for Exterior Use

European Conformity

SUPPLY

Installation must be carried out by a qualified electrician in accordance with BS 7671:2008 Wiring Regulations. 230/240V AC 50/60Hz mains supply to a suitable SELV LED Driver.

Site conditions: LED equipment is more susceptible to static damage and overvoltage than previous technology. Before handling or connecting to the mains supply ensure that all MSL products are protected from static discharge and that the mains supply is to regulation. (230V +10 -6%)

Mains cables must be double insulated, strain relieved and separated from E.L.V output cables.

This unit requires a constant current driver. 700mA Max.

Observe polarity:
Positive (+) is marked as RED.
Incorrect supply or reverse polarity can cause irreparable damage.

All connections must be made before switching on mains. If the supply is energised prior to making the connections to the fitting then the resulting surge will damage the LED.

Multiple LEDs should be wired in series, refer to driver instructions for minimum/maximum load.

All lighting equipment is delicate and easily damaged through misuse or inappropriate installation (mechanical or electrical). Repairs and replacements may cause delays and will be chargeable. Contact MSL for support if required. For full warranty terms & conditions please visit our website.

The light source contained in this luminaire shall only be replaced by the manufacturer or his service agent or a similar qualified person.

Dimming control circuit source must be of SELV insulation class.

Ensure supply driver and connectors are housed indoors OR in a suitable IP rated enclosure

FIXING

Check that the mounting surface is suitable for the installation of this fitting.

A 33mm diameter hole is required for this fitting.

Step 1 Make mains connections to SELV LED driver and extra low voltage connections to the fitting.

Step 2 Insert cables through mounting hole, press the fin in and push into the hole. The fin should spring out holding the fitting in place.

Secure unit in place using silicone adhesive or similar if the fitting is not supplied with a ‘fin’.

If using the ‘fin’ retaining method in walls/ceiling thinner that 9mm then an adhesive may be required to secure fitting.

After opening the sealed portion of the luminaire for any reason, MSL recommends running the fitting for 15 minutes with the lid open to expel moisture before closing it up. This will prevent condensation on the lens and protect the fitting from corrosion.

WARNING: Do not look at exposed LED lamps in operation. Eye injury can result.

Cleaning:

Fully isolate the fitting and allow to cool.

Clean the fitting with a slightly damp lint free cloth from a mild solution of soap and water. The fitting must be completely dry before reconnecting power.

Incompatible or abrasive chemicals can damage the fitting, contact MSL for advice if required.

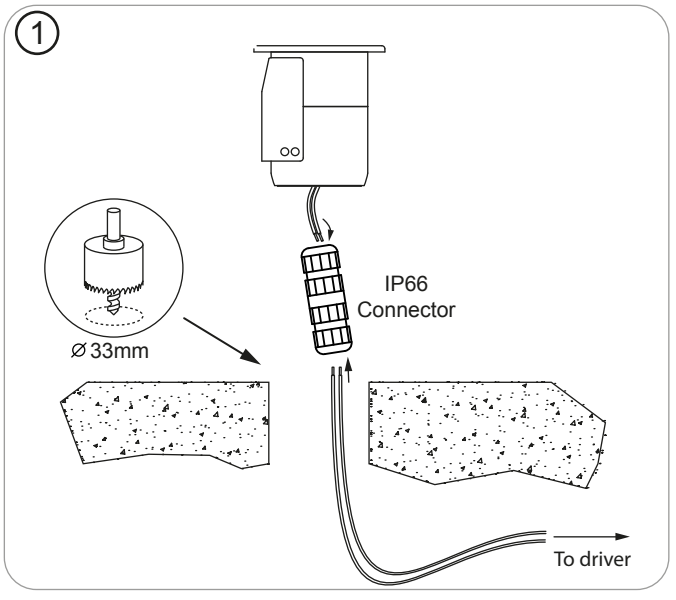

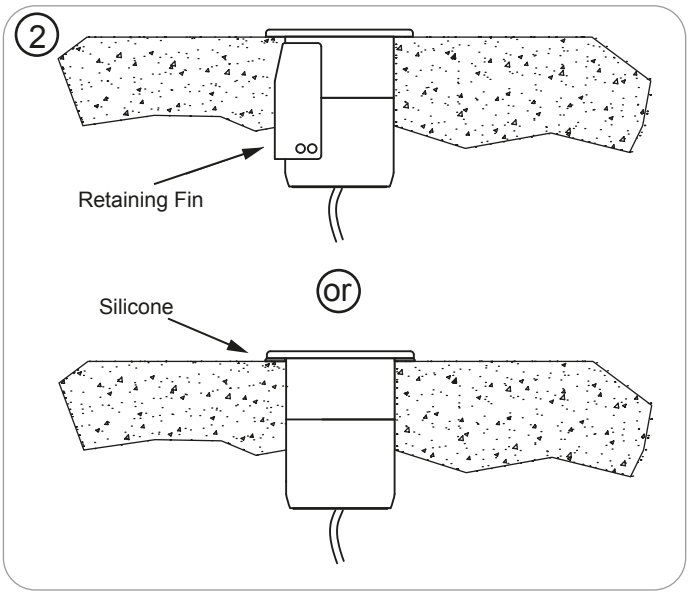

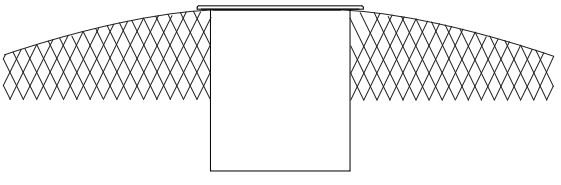

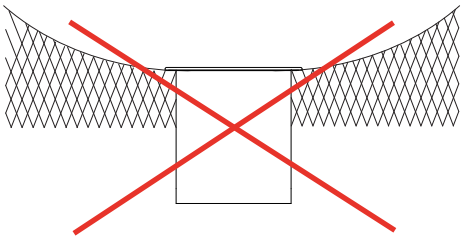

Install in well drained ground.
Surface gradient must run away from the fitting.

OPTIC CHANGE

To change the optic;

Step 1 Unscrew the bezel
Step 2 Remove the optic from the black optic holder
Step 3 Place the new optic in the black optic holder
Step 4 Replace black optic holder in fitting, placing the four legs of the optic holder into the corresponding holes in the fitting, and fully tighten bezel

1

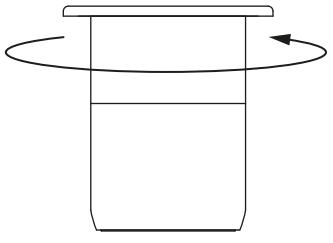

2

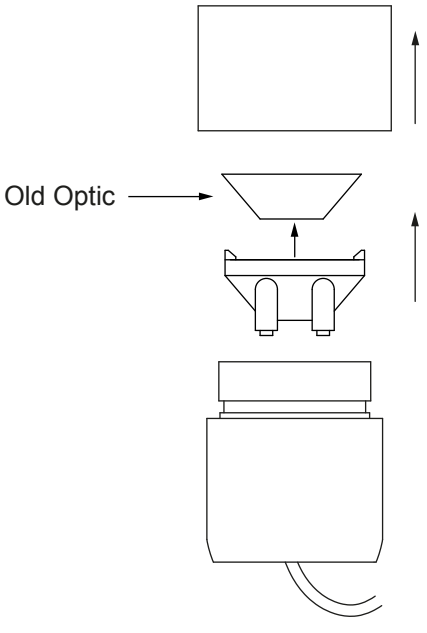

3

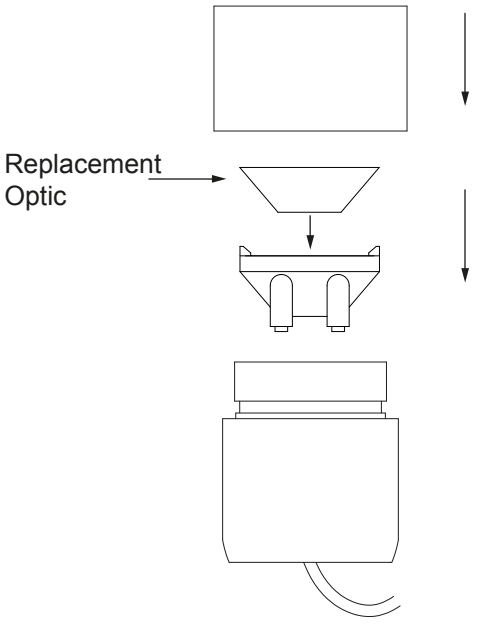
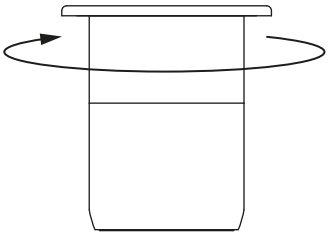
4