LED-FGI295-E

INSTALLATION INSTRUCTIONS

i-LED

linea light group

ALCOR

inter•lux
3741 Commerce Dr. #306-308
Baltimore, MD 21227
Phone (410) 381-1497
inter-lux.com

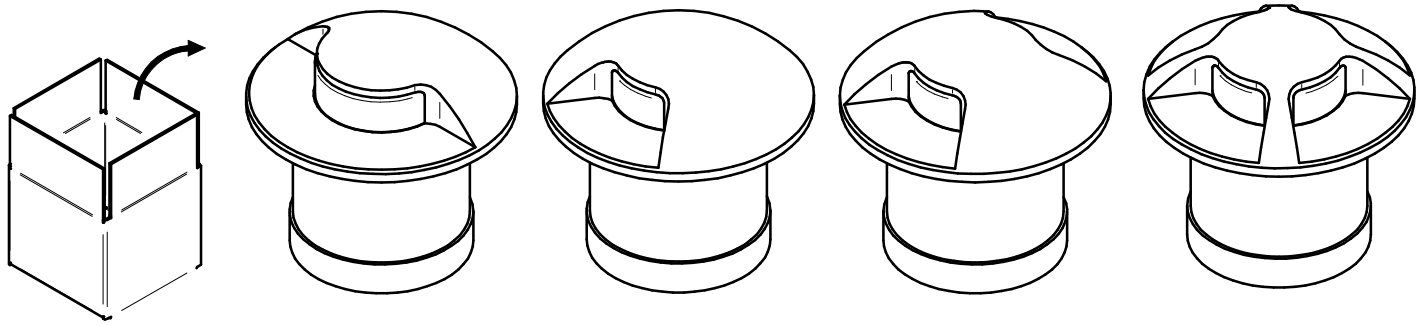

1

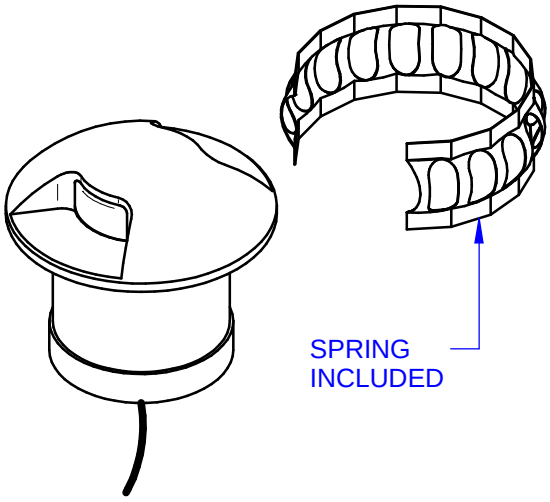

2

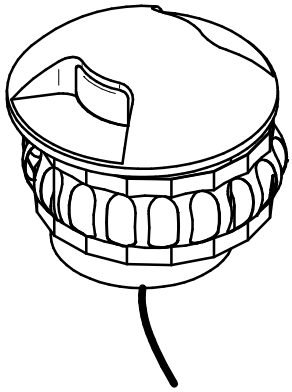

3

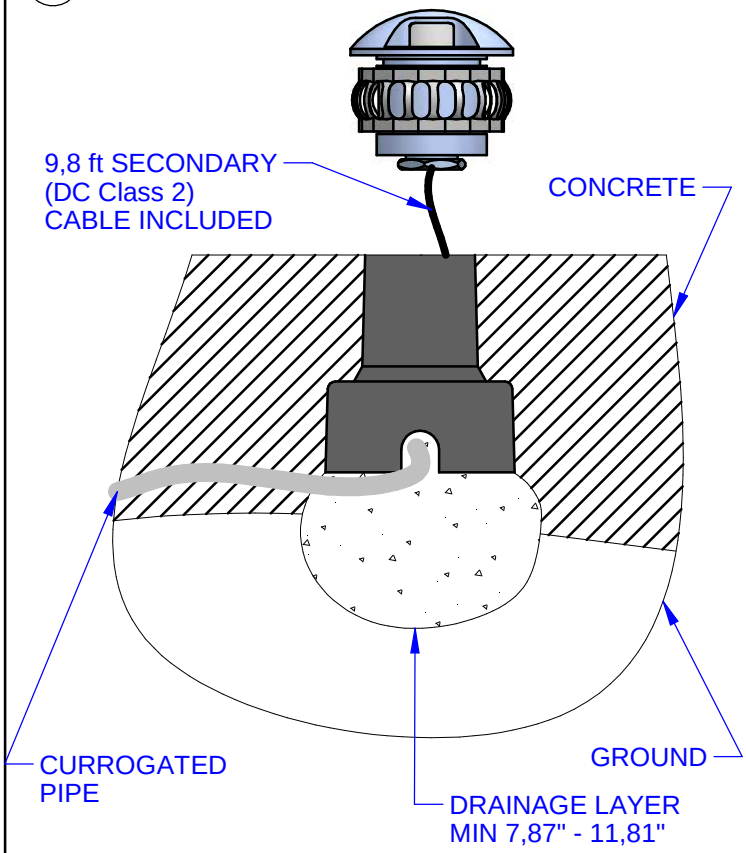

4

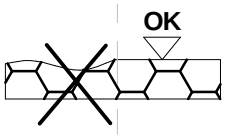

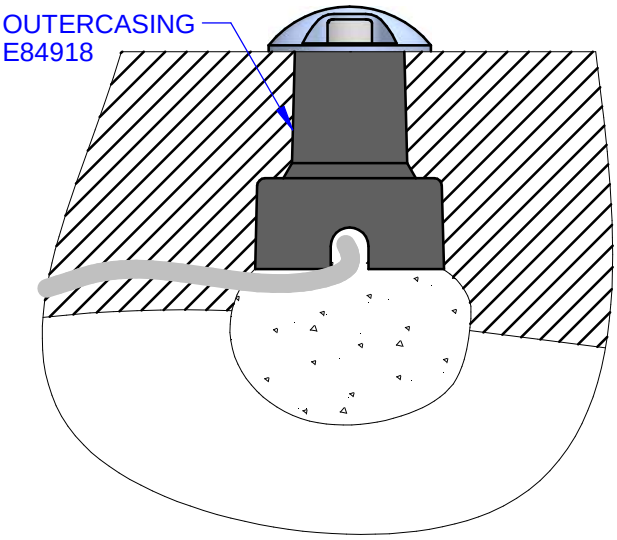

OUTERCASING
cod. E84918

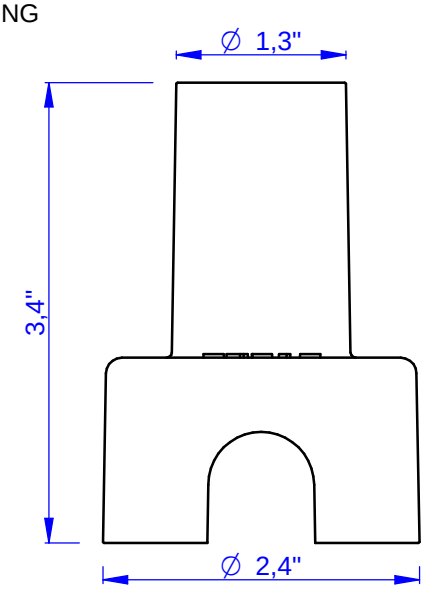

THIS PRODUCT MUST BE INSTALLED IN ACCORDANCE WITH THE APPLICABLE INSTALLATION CODE BY A PERSON FAMILIAR WITH THE CONSTRUCTION AND OPERATION OF THE PRODUCT AND THE HAZARDS INVOLVED

MOUNTING INSTRUCTIONS

READ ALL OF THESE INSTRUCTIONS BEFORE INSTALLING FIXTURES

· Keep all of the instructions for future reference
· Turn off power before installing fixture
· Installation is to be performed by a qualified electrician only
· All installations must conform to the National Electrical Code as well as all local jurisdictional codes and regulations
· Any modification of the luminaire will void any and all written or implied warranties
· The manufacture accepts no responsibility for damage to persons or property airing through improper use or installation

INSTALLATION SEQUENCE

- Mount remote driver in accessible well ventilated space
- Ensure power is off before connecting driver to line voltage
- Fix the outercasing on the ground, the surface must be perfectly flat
- Insert the spring on the article
- Connect secondary wiring to fixture wiring
- Insert the article into the outercasing
- WARNING - Be sure secondary wiring is connected to driver BEFORE energizing to avoid LED failure
- Energize

Colours Secondary Cable	*Pole*
Wire red	+
Wire blue	-