LED-FGI451-E

i-LED

linea light group

INSTALLATION INSTRUCTIONS

QUANTUM // QUANTUM-Y
QUANTUM-J1 // QUANTUM-J2

inter•lux
3741 Commerce Dr. #306-308
Baltimore, MD 21227
Phone (410) 381-1497
inter-lux.com

Intertek

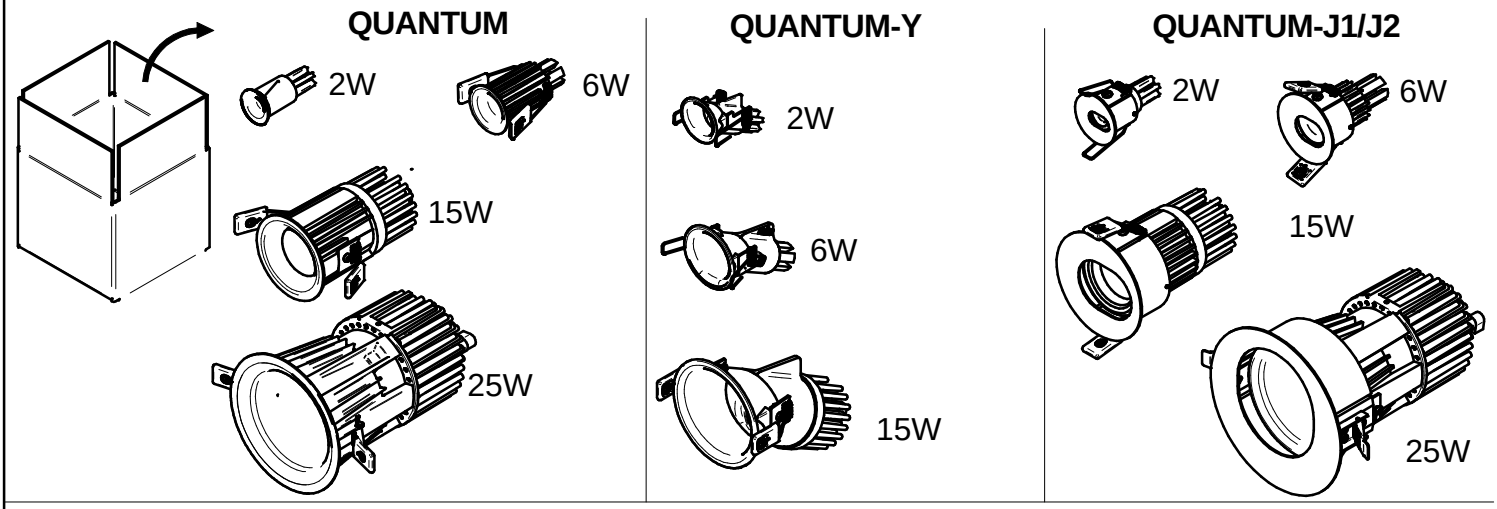

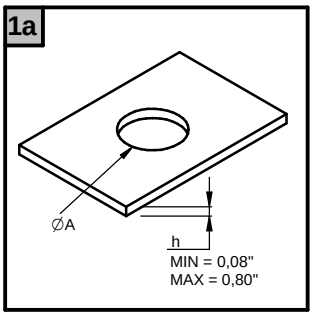

Art.	ϕ A
QUANTUM (2W)	1,14"
QUANTUM (6W)	1,57"
QUANTUM (15W)	3"
QUANTUM (25W)	5"
QUANTUM-Y (2W)	1,61"
QUANTUM-Y (6W)	2,20"
QUANTUM-Y (15W)	3,86"

Art.	ϕ A
QUANTUM-J1 (2W)	1,70"
QUANTUM-J1 (6W)	2,24"
QUANTUM-J1 (15W)	3,50"
QUANTUM-J1 (25W)	5,98"
QUANTUM-J2 (2W)	2,24"
QUANTUM-J2 (6W)	3"
QUANTUM-J2 (15W)	4,53"

QUANTUM-J1

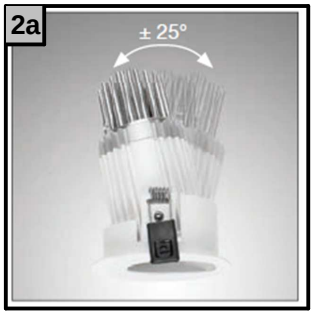

QUANTUM-J2

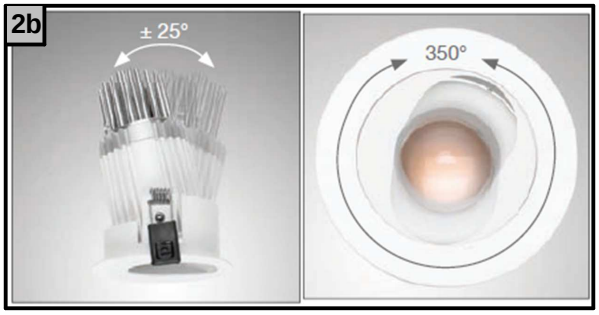

ART. 2W

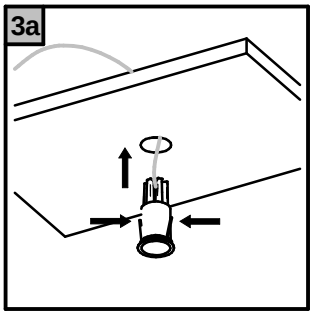

ART. 6-15-25W

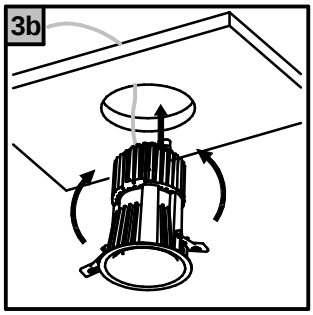

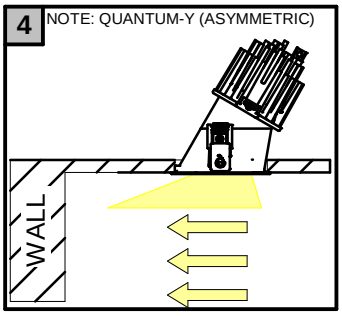

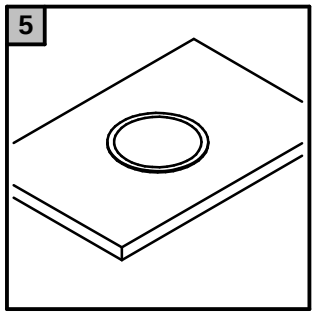

THIS PRODUCT MUST BE INSTALLED IN ACCORDANCE WITH THE APPLICABLE INSTALLATION CODE BY A PERSON FAMILIAR WITH THE CONSTRUCTION AND OPERATION OF THE PRODUCT AND THE HAZARDS INVOLVED

MOUNTING INSTRUCTIONS

READ ALL OF THESE INSTRUCTIONS BEFORE INSTALLING FIXTURES

· CAUTION: USE ONLY WITH CLASS 2 POWER UNIT
· Keep all of the instructions for future reference
· Turn off power before installing fixture
· Installation is to be performed by a qualified electrician only
· All installations must conform to the National Electrical Code as well as all local jurisdictional codes and regulations
· Any modification of the luminaire will void any and all written or implied warranties
· The manufacture accepts no responsibility for damage to persons or property airing through improper use or installation

INSTALLATION SEQUENCE

- Cut correct size opening in ceiling [1a]
- Mount remote driver in accessible well ventilated space
- Ensure power is off before connecting driver to line voltage
- Adjust tilting [2a]
- Adjust tilting or rotation [2b]
- Connect secondary wiring to fixture wiring
- Press the spring and insert the article into the ceiling opening [3a]
- Turn the springs and insert the article into the ceiling opening [3b]
- WARNING - Be sure secondary wiring is connected to driver BEFORE energizing to avoid LED failure
- Energize