60 Linear Plaster-in Submittal - 4 Sided Pattern

inter•lux

Project Name _____ SO # _____ PO# _____ Fixture Type _____

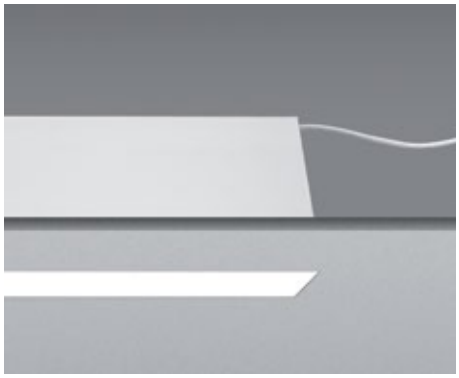

Ordering Information

Model	Type	Length	LED[2]	Color	Voltage	Power	Diffuser	Mount	Options
WG-P60LDL	P							P	
WG-P60LDL plaster-in	P[1]	A x B x A x B	L M H	827 830 835 840 927 930 935 940	UNV	S D010 D3W DES	OD (STD) SD DOD DSD	P	WL
					120	DFPN			

Plaster-in

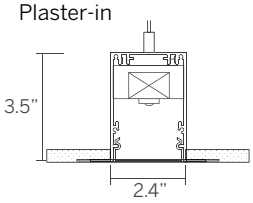

Flush Diffuser - OD / SD

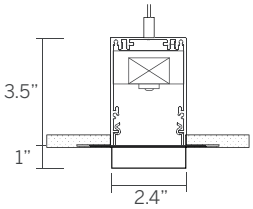

Drop Diffuser - DOD / DSD

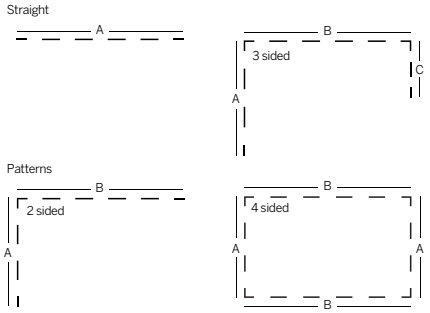

Luminaire

- Trimless 'plaster-in' for drywall ceilings and walls.
- Installation from below for remodel or new construction.
- Easily installed internal LED tray assembly with integral driver.
- High reflectance white reflector.
- Flush snap-in opal diffuser (standard).
- Powdercoat painted white - RAL 9010.

Type

- P = Standard patterns 2, 3 or 4 sided with 90° corners[1]

Length

- A, B, C = specify feet & inches to the nearest 0.25" (i.e. 6'5.5")
- cut-out-length = fixture length + .25"
- cut-out width = 2.6"

LED[2]

- L = Low Power (3W/ft)
- M = Mid Power (6W/ft)
- H = High Power (10W/ft)

Color

80+ CRI minimum

- 827 = 2700K
- 830 = 3000K
- 835 = 3500K
- 840 = 4000K
- For 90+ CRI specify 927, 930, etc

Voltage

- UNV = 120-277V
- 120 = 120V (DFPN only)

Power Supply

- S = Standard driver, 120-277V
- D010 = Osram, 10%, 0-10V dimming, 120-277V
- D3W = Lutron, 1%, 3-wire fluorescent dimming, 120-277V
- DES = Lutron, 1%, EcoSystem E1/E2 digital dimming, 120-277V
- DFPN = Lutron 1% forward phase with neutral, 120V only

Diffuser

- OD = Flush opal diffuser (standard)
- SD = Flush satin diffuser
- DOD = Drop opal diffuser
- DSD = Drop satin diffuser

Mounting

- P = Plaster-in

Options

- WL = Wet location (requires recessed installation in protected canopy)
- Contact factory for emergency lighting options.

1 See pattern specsheet.
2 Wattage shown does not include power supplies/drivers.

Customer Approval

☐ Approved
☐ Approved with corrections noted
☐ Revise and Resubmit

Company _____
Signature _____
Print Name _____
Date _____

Original Date Submitted _____

60 Linear Plaster-in Submittal - 4 Sided Pattern

inter•lux

Project Name _____ SO # _____ PO# _____ Fixture Type _____

Flush Diffuser - OD / SD

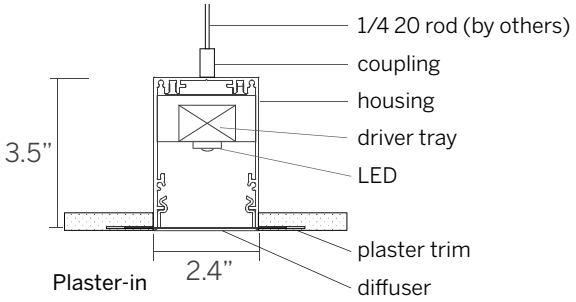

Drop Diffuser - DOD / DSD

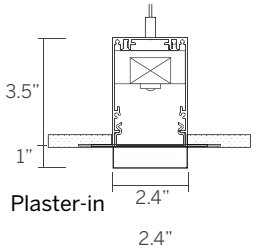

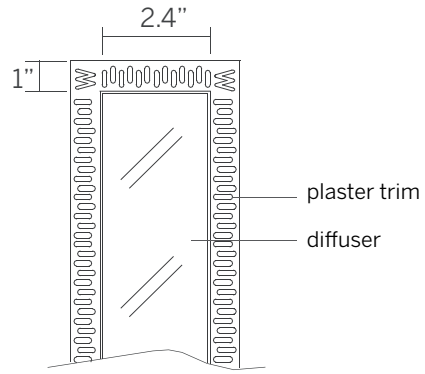

Plaster-in

60 Linear Plaster-in Submittal - 4 Sided Pattern

inter•lux

Project Name _____ SO # _____ PO# _____ Fixture Type _____

System	Qty.	'A'	'B'
1			
2			
3			
4			
5			

Customer Approval

- ☐ Approved
- ☐ Approved with corrections noted
- ☐ Revise and Resubmit

Company _____

Signature _____

Print Name _____
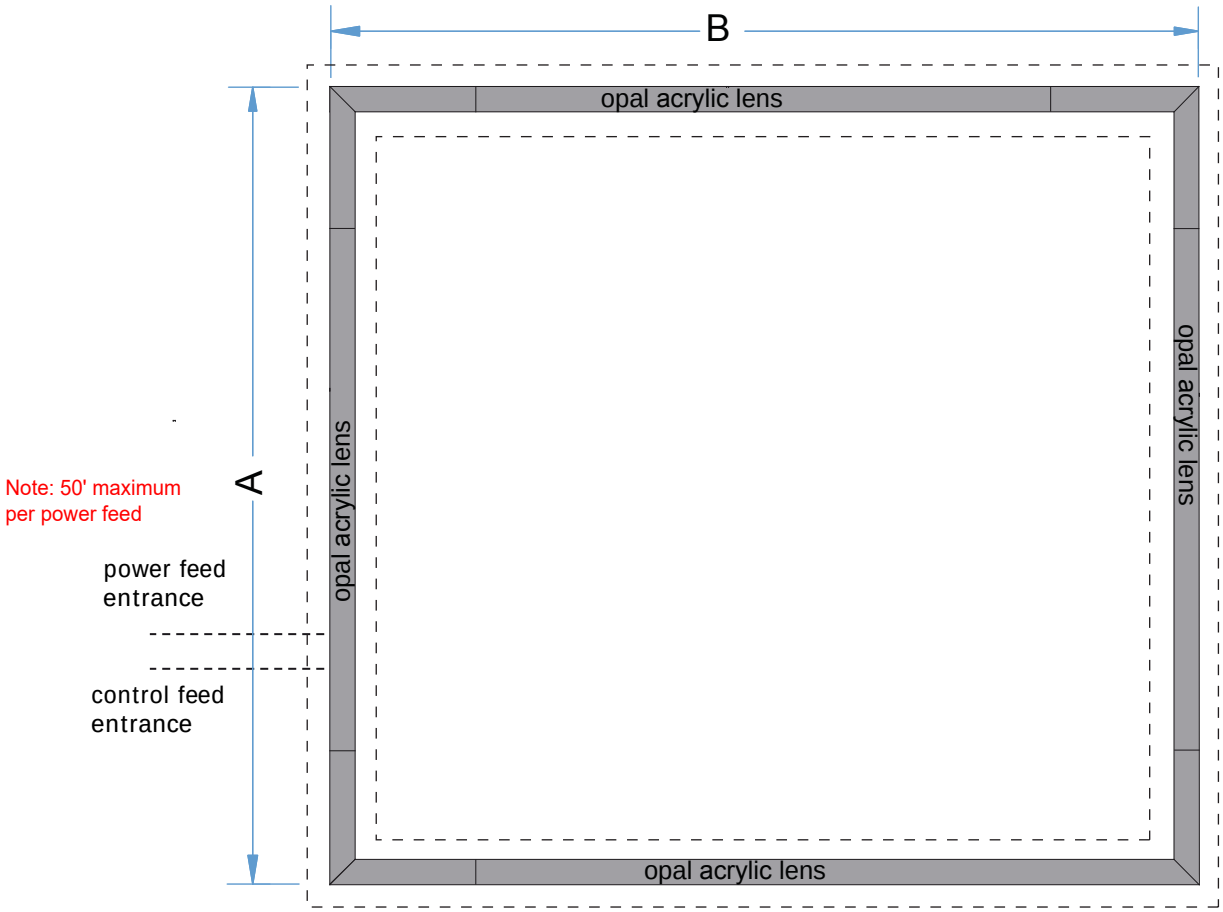
Date _____