aura

Aura is best used as workspace task lighting, conference rooms. Direct lighting with indirect illuminated ring of light around the fixture.

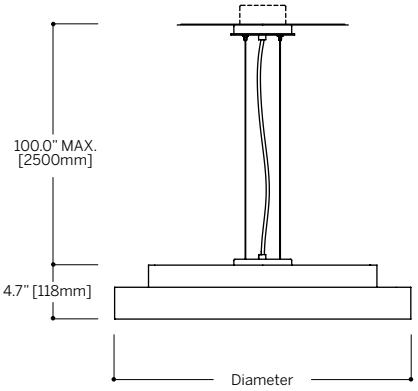

Diameter
15.6" [396mm]
18.6" [472mm]
20.6" [523mm]
22.6" [574mm]
25.6" [650mm]
30" [762mm]
34" [864mm]
36" [914mm]

Finish
Painted Anodized Aluminum

Optional finish
Painted White
Painted Custom Color

Diffuser
Satin White Opal Acrylic

Optional diffuser
Clear Satin Acrylic

* Available in surface mount. See section Surface.

Lamping

1520.P33SW19-15.6
1 x 22 Watt / 2GX13

1520.P33SW19-18.6
1 x 22 Watt / 2GX13

1520.P36SW19-20.6
1 x 22 + 40 Watt / 2GX13

1520.P34SW19-20.6
1 x 40 Watt / 2GX13

1520.P35SW19-20.6
1 x 55 Watt / 2GX13

1520.P36SW19-22.6
1 x 22 + 40 Watt / 2GX13

1520.P34SW19-22.6
1 x 40 Watt / 2GX13

1520.P35SW19-22.6
1 x 55 Watt / 2GX13

1520.P36SW19-25.6
1 x 22 + 40 Watt / 2GX13

1520.P174SW19-25.6
4 x 24 Watt / 2G11

1520.P193SW19-25.6
3 x 36 Watt / 2G11

1520.P194SW19-25.6
4 x 36 Watt / 2G11

1520.P194SW19-30
4 x 36 Watt / 2G11

1520.P196SW19-34
6 x 36 Watt / 2G11

1520.P203SW19-34
3 x 40 Watt / 2G11

1520.P204SW19-34
4 x 40 Watt / 2G11

1520.P196SW19-36
6 x 36 Watt / 2G11

1520.P203SW19-36
3 x 40 Watt / 2G11

1520.P204SW19-36
4 x 40 Watt / 2G11

Consult factory for LED and dimming options
Specify 120 or 277 Volt