Step

TECHNICAL SHEET

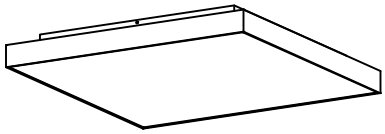

PERSPECTIVE VIEW

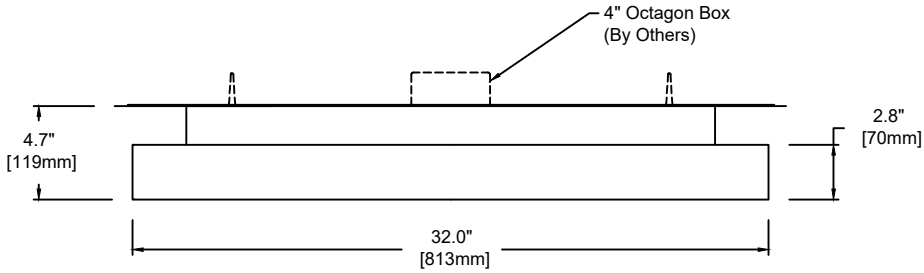

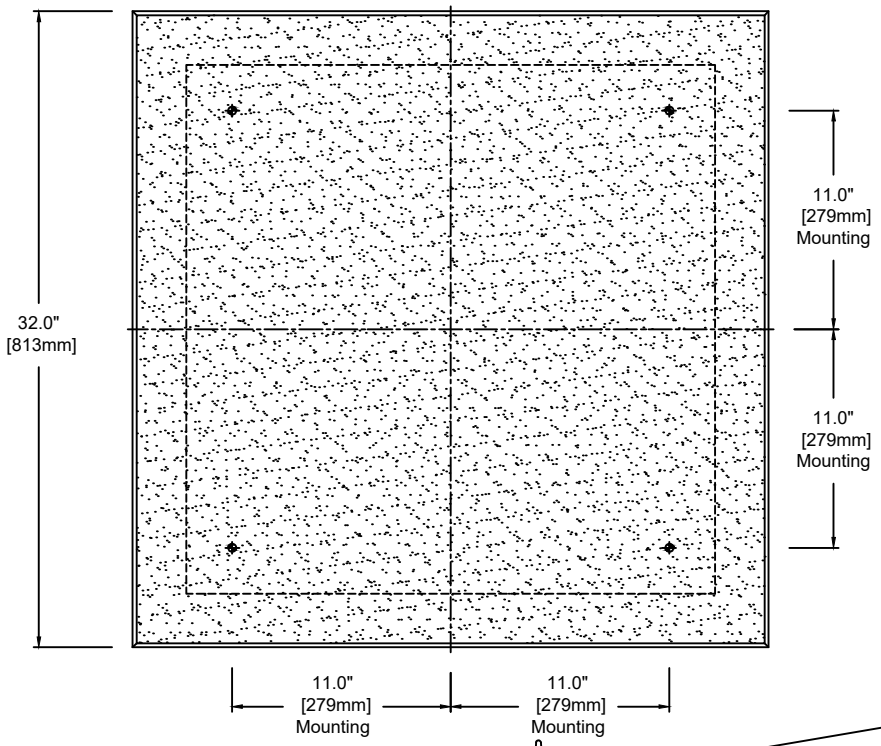

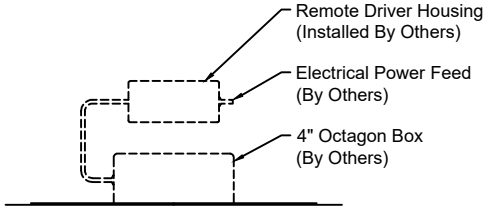

Remote Driver Detail:
Scale: N.T.S.

Note Remote Driver:
L3D0E - Lutron Hi-Lume
Premier 0.1% EcoSystem - Only

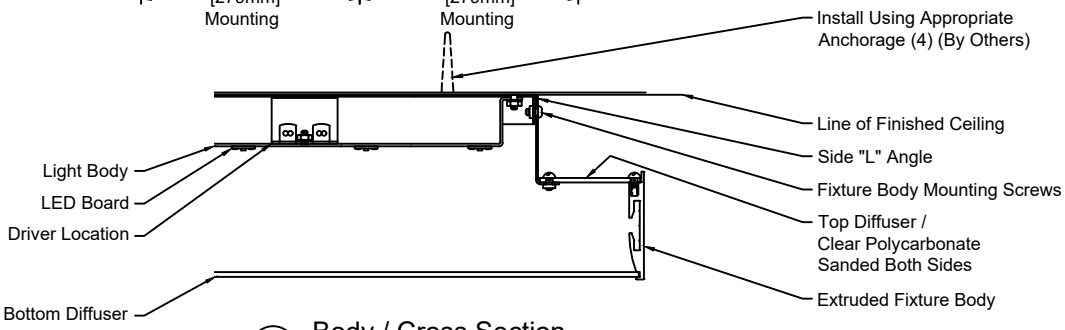

Body / Cross Section
Scale: N.T.S.

Fixture Weight : 25 lbs

1540	S	32	L	830	U	S	SW	16
Model	**Type**	**Size**	**Wattage**	**Color Temp**	**Voltage**	**Control**	**Diffuser**	**Finish**
	S - Surface	32"	L	827 - 2,700K 830 - 3,000K 835 - 3,500K 840 - 4,000K	1 - 120 VAC only U - 120/277 V	S D010 DFPN L3DAE L3D0E	SW - Satin Opal Acrylic	16 - Painted Anodized Aluminum 21 - Painted White - RAL 9010 Matte 22 - Painted Custom Color

Wattage and Control

Control (Integral 24V):
S - Non-Dim
D010 - 0-10V 10%
DFPN - Lutron Forward Phase 1%, 120VAC
L3DAE - Lutron Hi-Lume 1% EcoSystem

Control (Remote 24V):
L3D0E - Lutron Hi-Lume Premier 0.1% EcoSystem

Wattage "L" - 54 Watt
2,700K - 7,200 lm
3,000K - 7,200 lm
3,500K - 7,488 lm
4,000K - 7,632 lm

Technical Data:
Form - linear, Operating voltage: 24VDC
Color rendering index Ra min: 82 CRI, Available in 90 CRI
Viewing angle: 110°
Lifetime - L70: 60,000h
Working temperature: -20°C to 60°C (-4°F to 140°F)

Remote Driver:
Max. wiring distance / Load

Wire Gauge	Lutron ≤96W
#18AWG	25'
#16AWG	40'
#14AWG	60'

inter•lux

All specifications subject to change without notice © 2019